LED MR16

7.8MR16/PER/930/S10/Dim/EC/12V 10/1FB

Philips LED MR-16 lamps with single optic technology provide the look and color quality of traditional halogens while using a fraction of the energy. A perfect fit for spot lighting, they are compatible with most existing fixtures with MR16 GU5.3 holders and are designed as a retrofit replacement for halogen or incandescent spots.

Product data

General Information	
Base	GU5.3 [GU5.3]
Nominal Lifetime (Nom)	25000 h
Switching Cycle	50000X
Technical Type	7.8-35W

Light Technical	
Color Code	930 [CCT of 3000K]
Beam Angle (Nom)	10 °
Initial lumen (Nom)	480 lm
Luminous Flux (Rated) (Nom)	480 lm
Luminous Intensity (Nom)	5300 cd
Color Designation	White (WH)
Rated Beam Angle	10 °
Correlated Color Temperature (Nom)	3000 K
Luminous Efficacy (rated) (Nom)	61.00 lm/W
Color Consistency	<3
Color Rendering Index (Nom)	95
LLMF At End Of Nominal Lifetime (Nom)	70 %

Operating and Electrical	
Power (Rated) (Nom)	7.8 W
Lamp Current (Nom)	880 mA
Starting Time (Nom)	0.5 s
Warm Up Time to 60% Light (Nom)	0.5 s
Power Factor (Nom)	0.7
Voltage (Nom)	ac electronic 12 V

Temperature	
T-Case Maximum (Nom)	105 °C

Controls and Dimming	
Dimmable	Yes

Approval and Application	
Suitable For Accent Lighting	Yes

Product Data	
Order product name	7.8MR16/PER/930/S10/Dim/EC/12V 10/1FB
EAN/UPC - Product	046677470142
Order code	470146
Numerator - Quantity Per Pack	1
Numerator - Packs per outer box	10
Material Nr. (12NC)	929001872604

LED MR16

Net Weight (Piece)	0.056 kg

Dimensional drawing

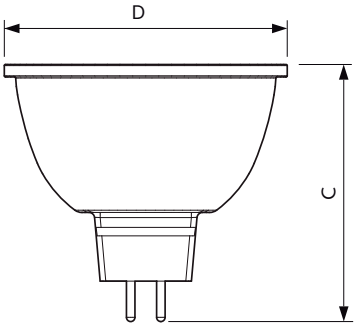

Product	D	C
7.8MR16/PER/930/S10/Dim/EC/12V 10/1FB	51 mm	46 mm

MR16 12V 7.5-35W 480lm 10D 3000K GU5.3 D

Photometric data

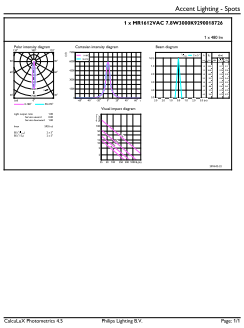

LEDspot 7.8W GU5.3 MR16 930 10D DIM

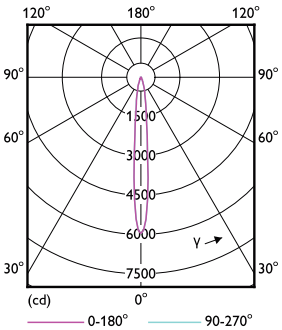

LEDspot 7.8W GU5.3 MR16 927 10D DIM

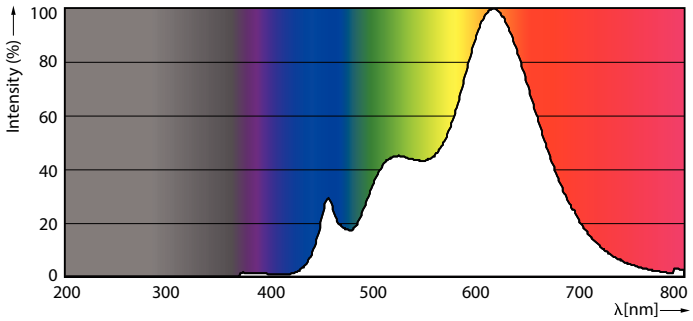

LEDspot 7.8W GU5.3 MR16 930 10D DIM

LED MR16

Lifetime

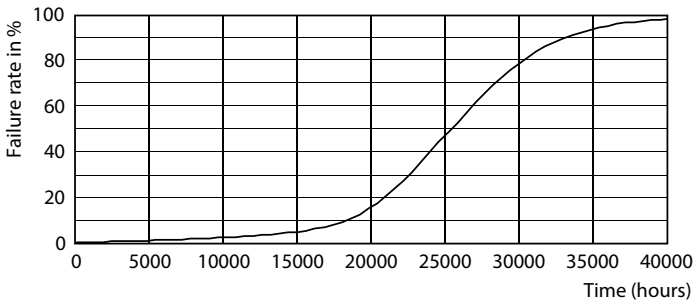

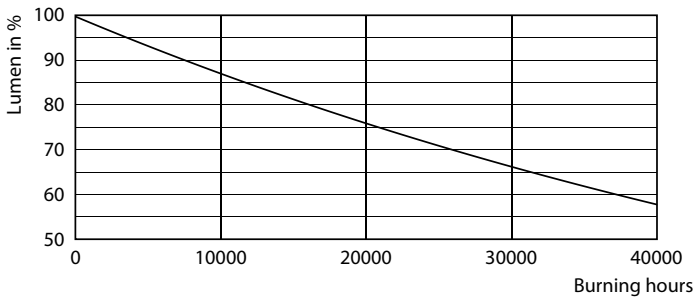

LEDspot 7.8W GU5.3 MR16 927 10D DIM

LEDspot 7.8W GU5.3 MR16 927 10D DIM

© 2019 Signify Holding All rights reserved. Signify does not give any representation or warranty as to the accuracy or completeness of the information included herein and shall not be liable for any action in reliance thereon. The information presented in this document is not intended as any commercial offer and does not form part of any quotation or contract, unless otherwise agreed by Signify. Philips and the Philips Shield Emblem are registered trademarks of Koninklijke Philips N.V.