Affordability and energy savings - all in one lamp

CorePro LEDtube InstantFit T8

The CorePro LED Type A - Ballast Driven InstantFit TLED is a great LED solution suitable for replacing T8 fluorescent lamps, using the existing ballast. The InstantFit (Type A) lamps can also be used with Philips TLED drivers for Type C applications.

Benefits

- Offers lowest cost of installation and easiest upgrade fluorescent T8's to LED lighting technology
- Reliable performance - color and lumen maintenance
- 240 degree beam angle and a 350 degree illumination angle

Features

- Average life rating of 50,000 hours and a 5-year limited warranty
- Compatibility with over 200 ballasts and drivers
- Philips proprietary safety features
- DLC, NSF and RoHS listed

Application

- Education facilities and Offices
- Industrial and warehouses
- Parking lots and covered car parks

CorePro LEDtube InstantFit T8

Versions

G13

FA8

Dimensional drawing

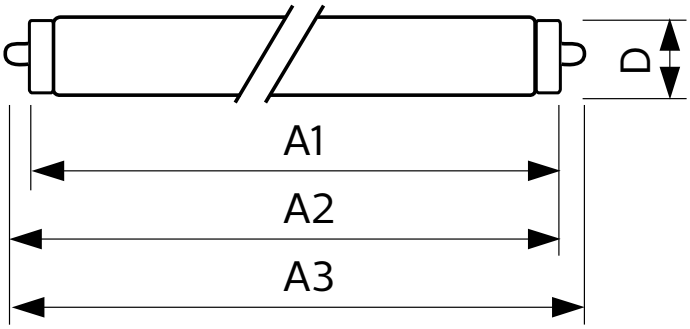

Product	D1	D2	A1	A2	A3
30T8/PRO/96-840/ IF42/G/FA8 10/1	25.5 mm	28 mm	2366.9 mm	2375.8 mm	2384.7 mm
30T8/PRO/96-835/ IF39/G/FA8 10/1	25.5 mm	28 mm	2366.9 mm	2375.8 mm	2384.7 mm
30T8/PRO/96-830/ IF39/G/FA8 10/1	25.5 mm	28 mm	2366.9 mm	2375.8 mm	2384.7 mm
30T8/PRO/96-850/ IF42/G/FA8 10/1	25.5 mm	28 mm	2366.9 mm	2375.8 mm	2384.7 mm

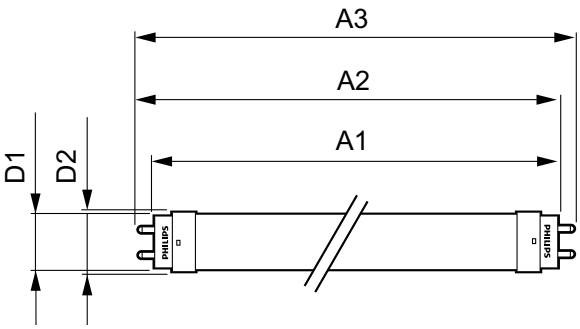

Product	D1	D2	A1	A2	A3
12T8/PRO/48-850/IF18/G 10/1 FB	25.7 mm	26.3 mm	1198.1 mm	1205.2 mm	1212.3 mm
12T8/PRO/48-840/IF18/G 10/1 FB	25.7 mm	26.3 mm	1198.1 mm	1205.2 mm	1212.3 mm
12T8/PRO/48-835/IF17/G 10/1 FB	25.7 mm	26.3 mm	1198.1 mm	1205.2 mm	1212.3 mm
12T8/PRO/48-830/IF17/G 10/1 FB	25.7 mm	26.3 mm	1198.1 mm	1205.2 mm	1212.3 mm
14T8/PRO/48-850/IF21/G 10/1 FB	25.7 mm	28 mm	1198 mm	1205 mm	1212 mm
14T8/PRO/48-840/IF21/G 10/1 FB	25.7 mm	28 mm	1198 mm	1205 mm	1212 mm
14T8/PRO/48-835/ IF20/G 10/1 FB	25.7 mm	28 mm	1198 mm	1205 mm	1212 mm
14T8/PRO/48-830/ IF20/G 10/1 FB	25.7 mm	28 mm	1198 mm	1205 mm	1212 mm

CorePro LEDtube InstantFit T8

Dimensional drawing

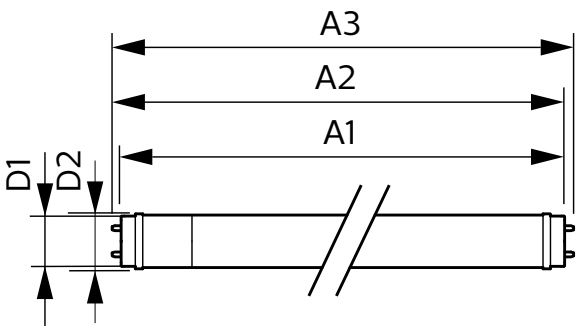

Product	D1	D2	A1	A2	A3
10T8/COR/48-850/IF16/G 25/1	25.7 mm	28 mm	1198.1 mm	1205.2 mm	1212.3 mm
10T8/COR/48-840/IF16/G 25/1	25.7 mm	28 mm	1198.1 mm	1205.2 mm	1212.3 mm

Controls and Dimming	
Dimmable	No
Operating and Electrical	
Starting Time (Nom)	0.5 s
General Information	
Nominal Lifetime (Nom)	50000 h
Rated Lifetime (Hours)	50000 h
Switching Cycle	50000X
Light Technical	
Llmf At End Of Nominal Lifetime (Nom)	70 %
Temperature	
T-Ambient (Max)	45 °C
T-Ambient (Min)	-20 °C
T-Storage (Max)	65 °C
T-Storage (Min)	-40 °C

Approval and Application

Order Code	Full Product Name	Energy Efficiency Label (EEL)
470096	14T8/PRO/48-830/IF20/G 10/1 FB	Not applicable
470104	14T8/PRO/48-835/IF20/G 10/1 FB	Not applicable
470112	14T8/PRO/48-840/IF21/G 10/1 FB	Not applicable
470120	14T8/PRO/48-850/IF21/G 10/1 FB	Not applicable
530469	12T8/PRO/48-830/IF17/G 10/1 FB	-
530477	12T8/PRO/48-835/IF17/G 10/1 FB	-
530485	12T8/PRO/48-840/IF18/G 10/1 FB	-
530493	12T8/PRO/48-850/IF18/G 10/1 FB	-
541986	10T8/COR/48-840/IF16/G 25/1	-
541994	10T8/COR/48-850/IF16/G 25/1	-
533000	30T8/PRO/96-830/IF39/G/FA8 10/1	-
533018	30T8/PRO/96-835/IF39/G/FA8 10/1	-
533026	30T8/PRO/96-840/IF42/G/FA8 10/1	-
533034	30T8/PRO/96-850/IF42/G/FA8 10/1	-

Operating and Electrical

Order Code	Full Product Name	Input Frequency	Voltage (Nom)	Power (Rated) (Nom)
470096	14T8/PRO/48-830/IF20/G 10/1 FB	25000-105000 Hz	120-277, 347 V	14 W
470104	14T8/PRO/48-835/IF20/G 10/1 FB	25000-105000 Hz	120-277, 347 V	14 W
470112	14T8/PRO/48-840/IF21/G 10/1 FB	25000-105000 Hz	120-277, 347 V	14 W
470120	14T8/PRO/48-850/IF21/G 10/1 FB	25000-105000 Hz	120-277, 347 V	14 W
530469	12T8/PRO/48-830/IF17/G 10/1 FB	25000-105000 Hz	120-277, 347 V	12 W
530477	12T8/PRO/48-835/IF17/G 10/1 FB	25000-105000 Hz	120-277, 347 V	12 W

Order Code	Full Product Name	Input Frequency	Voltage (Nom)	Power (Rated) (Nom)
530485	12T8/PRO/48-840/IF18/G 10/1 FB	25000-105000 Hz	120-277, 347 V	12 W
530493	12T8/PRO/48-850/IF18/G 10/1 FB	25000-105000 Hz	120-277, 347 V	12 W
541986	10T8/COR/48-840/IF16/G 25/1	25000-105000 Hz	120-277, 347 V	10 W
541994	10T8/COR/48-850/IF16/G 25/1	25000-105000 Hz	120-277, 347 V	10 W
533000	30T8/PRO/96-830/IF39/G/FA8 10/1	35000-150000 Hz	200-500 V	30 W
533018	30T8/PRO/96-835/IF39/G/FA8 10/1	35000-150000 Hz	200-500 V	30 W

CorePro LEDtube InstantFit T8

Order Code	Full Product Name	Input Frequency	Voltage (Nom)	Power (Rated) (Nom)
533026	30T8/PRO/96-840/ IF42/G/FA8 10/1	35000-150000 Hz	200-500 V	30 W

Order Code	Full Product Name	Input Frequency	Voltage (Nom)	Power (Rated) (Nom)
533034	30T8/PRO/96-850/ IF42/G/FA8 10/1	35000-150000 Hz	200-500 V	30 W

General Information

Order Code	Full Product Name	Cap-Base
470096	14T8/PRO/48-830/IF20/G 10/1 FB	G13
470104	14T8/PRO/48-835/IF20/G 10/1 FB	G13
470112	14T8/PRO/48-840/IF21/G 10/1 FB	G13
470120	14T8/PRO/48-850/IF21/G 10/1 FB	G13
530469	12T8/PRO/48-830/IF17/G 10/1 FB	G13
530477	12T8/PRO/48-835/IF17/G 10/1 FB	G13
530485	12T8/PRO/48-840/IF18/G 10/1 FB	G13

Order Code	Full Product Name	Cap-Base
530493	12T8/PRO/48-850/IF18/G 10/1 FB	G13
541986	10T8/COR/48-840/IF16/G 25/1	G13
541994	10T8/COR/48-850/IF16/G 25/1	G13
533000	30T8/PRO/96-830/IF39/G/FA8 10/1	FA8
533018	30T8/PRO/96-835/IF39/G/FA8 10/1	FA8
533026	30T8/PRO/96-840/IF42/G/FA8 10/1	FA8
533034	30T8/PRO/96-850/IF42/G/FA8 10/1	FA8

Light Technical (1/2)

Order Code	Full Product Name	Beam Angle (Nom)	Color Code	Correlated Color Temperature (Nom)	Color Rendering Index (Nom)
470096	14T8/PRO/48-830/ IF20/G 10/1 FB	-	830	3000 K	82
470104	14T8/PRO/48-835/ IF20/G 10/1 FB	-	835	3500 K	82
470112	14T8/PRO/48-840/ IF21/G 10/1 FB	-	841	4000 K	82
470120	14T8/PRO/48-850/ IF21/G 10/1 FB	-	850	5000 K	82
530469	12T8/PRO/48-830/ IF17/G 10/1 FB	-	830	3000 K	82
530477	12T8/PRO/48-835/ IF17/G 10/1 FB	-	835	3500 K	82
530485	12T8/PRO/48-840/ IF18/G 10/1 FB	-	841	4000 K	82

Order Code	Full Product Name	Beam Angle (Nom)	Color Code	Correlated Color Temperature (Nom)	Color Rendering Index (Nom)
530493	12T8/PRO/48-850/ IF18/G 10/1 FB	-	850	5000 K	82
541986	10T8/COR/48-840/ IF16/G 25/1	-	841	4000 K	82
541994	10T8/COR/48-850/ IF16/G 25/1	-	850	5000 K	82
533000	30T8/PRO/96-830/ IF39/G/FA8 10/1	240 °	830	3000 K	80
533018	30T8/PRO/96-835/ IF39/G/FA8 10/1	240 °	835	3500 K	80
533026	30T8/PRO/96-840/ IF42/G/FA8 10/1	240 °	841	4000 K	80
533034	30T8/PRO/96-850/ IF42/G/FA8 10/1	240 °	850	5000 K	80

Light Technical (2/2)

Order Code	Full Product Name	Luminous Flux (Nom)	Luminous Flux (Rated) (Nom)	Rated Beam Angle
470096	14T8/PRO/48-830/IF20/G 10/1 FB	2000 lm	2000 lm	-
470104	14T8/PRO/48-835/IF20/G 10/1 FB	2000 lm	2000 lm	-
470112	14T8/PRO/48-840/IF21/G 10/1 FB	2100 lm	2100 lm	-
470120	14T8/PRO/48-850/IF21/G 10/1 FB	2100 lm	2100 lm	-
530469	12T8/PRO/48-830/IF17/G 10/1 FB	1700 lm	1700 lm	-

Order Code	Full Product Name	Luminous Flux (Nom)	Luminous Flux (Rated) (Nom)	Rated Beam Angle
530477	12T8/PRO/48-835/IF17/G 10/1 FB	1700 lm	1700 lm	-
530485	12T8/PRO/48-840/IF18/G 10/1 FB	1800 lm	1800 lm	-
530493	12T8/PRO/48-850/IF18/G 10/1 FB	1800 lm	1800 lm	-
541986	10T8/COR/48-840/IF16/G 25/1	1600 lm	1600 lm	-
541994	10T8/COR/48-850/IF16/G 25/1	1600 lm	1600 lm	-

CorePro LEDtube InstantFit T8

Order Code	Full Product Name	Luminous Flux (Nom)	Luminous Flux (Rated) (Nom)	Rated Beam Angle
533000	30T8/PRO/96-830/ IF39/G/FA8 10/1	3950 lm	3950 lm	240 °
533018	30T8/PRO/96-835/ IF39/G/FA8 10/1	3950 lm	3950 lm	240 °

Order Code	Full Product Name	Luminous Flux (Nom)	Luminous Flux (Rated) (Nom)	Rated Beam Angle
533026	30T8/PRO/96-840/ IF42/G/FA8 10/1	4200 lm	4200 lm	240 °
533034	30T8/PRO/96-850/ IF42/G/FA8 10/1	4200 lm	4200 lm	240 °

Temperature

Order Code	Full Product Name	T-Case Maximum (Nom)
470096	14T8/PRO/48-830/IF20/G 10/1 FB	50 °C
470104	14T8/PRO/48-835/IF20/G 10/1 FB	50 °C
470112	14T8/PRO/48-840/IF21/G 10/1 FB	50 °C
470120	14T8/PRO/48-850/IF21/G 10/1 FB	50 °C
530469	12T8/PRO/48-830/IF17/G 10/1 FB	50 °C
530477	12T8/PRO/48-835/IF17/G 10/1 FB	50 °C
530485	12T8/PRO/48-840/IF18/G 10/1 FB	50 °C
530493	12T8/PRO/48-850/IF18/G 10/1 FB	50 °C
541986	10T8/COR/48-840/IF16/G 25/1	50 °C
541994	10T8/COR/48-850/IF16/G 25/1	50 °C
533000	30T8/PRO/96-830/IF39/G/FA8 10/1	45 °C
533018	30T8/PRO/96-835/IF39/G/FA8 10/1	45 °C
533026	30T8/PRO/96-840/IF42/G/FA8 10/1	45 °C
533034	30T8/PRO/96-850/IF42/G/FA8 10/1	45 °C

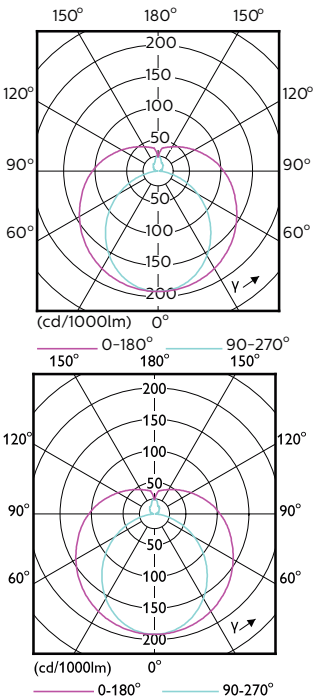

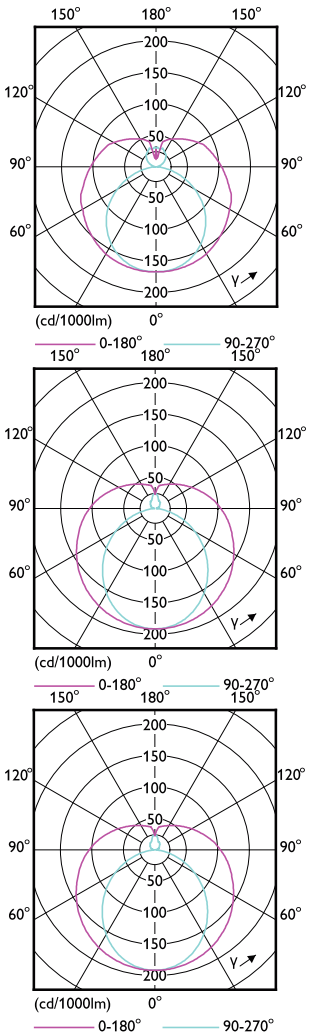

© 2019 Signify Holding All rights reserved. Signify does not give any representation or warranty as to the accuracy or completeness of the information included herein and shall not be liable for any action in reliance thereon. The information presented in this document is not intended as any commercial offer and does not form part of any quotation or contract, unless otherwise agreed by Signify. All trademarks are owned by Signify Holding or their respective owners.