The best compatibility and energy savings - all in one lamp

MasterClass LEDtube InstantFit T8

The Masterclass LED Type A - Ballast Driven (Plug and Play) InstantFit TLED is a great LED solutionsuitable for replacing T8 fluorescent lamps, using an exisiting ballast. Specific lamps can also be used on Philips Xitanium driver for Type C applications.

Benefits

- Offers lowest cost of installation and easiest upgrade flurescent T8's to LED lighting technology
- Dimmable product available for additional savings
- Reliable performance - color and lumen maintenance

Features

- Average life rating of 50,000 hours, with specific lamps up to 70,000 hours
- Compatibility with over 200 ballasts and drivers
- Philips proprietary safety features
- DLC, NSF and RoHS listed
- Available shatter-resistant polycarbonate construction

Application

- Office and Retail
- Industrial and warehouses
- Parking lots and covered car parks

MasterClass LEDtube InstantFit T8

Versions

G13

G13

G13

FA8

G13

G13

G13

FA8

R17d (RDC)

Dimensional drawing

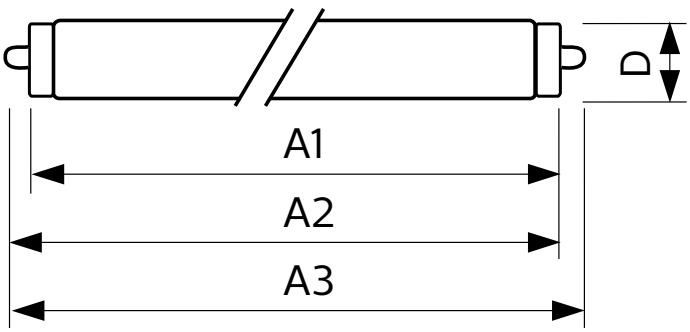

Product	D	A1	A2	A3
35T8/96-6500 IF FA8 10/1	27.9 mm	2366.9 mm	2375.2 mm	2383.5 mm
35T8/96-4000 IF FA8 10/1	27.9 mm	2366.9 mm	2375.2 mm	2383.5 mm
35T8/96-3500 IF FA8 10/1	27.9 mm	2366.9 mm	2375.2 mm	2383.5 mm
35T8/96-3000 IF FA8 10/1	27.9 mm	2366.9 mm	2375.2 mm	2383.5 mm

Dimensional drawing

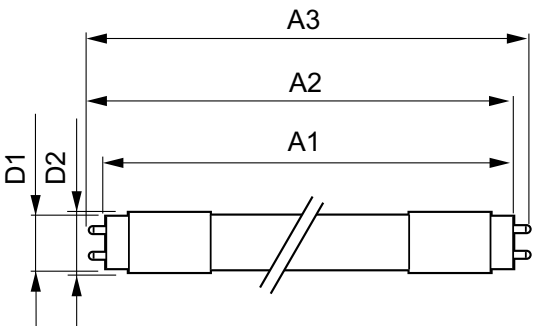

Product	D1	D2	A1	A2	A3
14T8/48-5000 IF 10/1 DIM TAA/NAFTA	25.7 mm	28 mm	1198.0 mm	1205.0 mm	1212.0 mm
14T8/48-4000 IF 10/1 DIM TAA/NAFTA	25.7 mm	28 mm	1198.0 mm	1205.0 mm	1212.0 mm
14T8/48-3500 IF 10/1 DIM TAA/NAFTA	25.7 mm	28 mm	1198.0 mm	1205.0 mm	1212.0 mm
14T8/48-3000 IF 10/1 DIM TAA/NAFTA	25.7 mm	28 mm	1198.0 mm	1205.0 mm	1212.0 mm
10T8/48-5000 IF 10/1 TAA/NAFTA	25.68 mm	28 mm	1198.0 mm	1205.0 mm	1212.0 mm
10T8/48-4000 IF 10/1 TAA/NAFTA	25.68 mm	28 mm	1198.0 mm	1205.0 mm	1212.0 mm
10T8/48-3500 IF 10/1 TAA/NAFTA	25.68 mm	28 mm	1198.0 mm	1205.0 mm	1212.0 mm
10T8/48-3000 IF 10/1 TAA/NAFTA	25.68 mm	28 mm	1198.0 mm	1205.0 mm	1212.0 mm
10T8/48-2700 IF 10/1	25.68 mm	26.3 mm	1198 mm	1205 mm	1212 mm

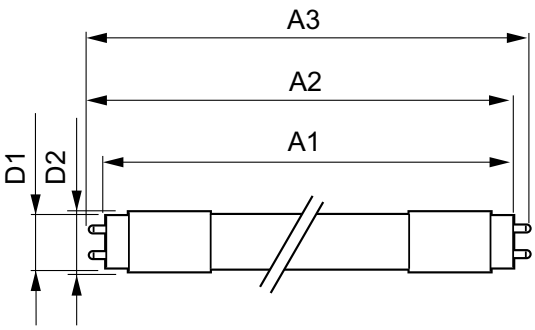

Product	D1	D2	A1	A2	A3
13T8 LED/48-5000 IF DIM 1PK 10/1	25.7 mm	26.3 mm	1198.1 mm	1205.2 mm	1212.3 mm
13T8 LED/48-4000 IF DIM 1PK 10/1	25.7 mm	26.3 mm	1198.1 mm	1205.2 mm	1212.3 mm
14T8/48-5000 IF 10/1 ROT	25.68 mm	26.3 mm	1198 mm	1205 mm	1212 mm
14T8/48-4000 IF 10/1 ROT	25.68 mm	26.3 mm	1198 mm	1205 mm	1212 mm
14T8/48-3500 IF 10/1 ROT	25.68 mm	26.3 mm	1198 mm	1205 mm	1212 mm
14T8/48-3000 IF 10/1 ROT	25.68 mm	26.3 mm	1198 mm	1205 mm	1212 mm
9T8 LED/36-5000 IF 10/1	25.7 mm	26.3 mm	893.4 mm	900.5 mm	907.6 mm
9T8 LED/36-4000 IF 10/1	25.7 mm	26.3 mm	893.4 mm	900.5 mm	907.6 mm
7T8 LED/24-5000 IF 10/1	25.7 mm	26.3 mm	588.6 mm	595.7 mm	602.8 mm
15.5T8/MAS/48-850/ IF25/P 25/1	25.7 mm	28 mm	1198.1 mm	1205.2 mm	1212.3 mm
15.5T8/MAS/48-840/ IF25/P 25/1	25.7 mm	28 mm	1198.1 mm	1205.2 mm	1212.3 mm
15.5T8/MAS/48-830/ IF23/P 25/1	25.7 mm	28 mm	1198.1 mm	1205.2 mm	1212.3 mm
15.5T8/MAS/48-835/ IF24/P 25/1	25.7 mm	28 mm	1198.1 mm	1205.2 mm	1212.3 mm
16.5T8 LED/48-5000 IF 10/1 UHO	25.68 mm	28 mm	1198 mm	1205 mm	1212 mm

Dimensional drawing

Product	D1	D2	A1	A2	A3
7T8/MAS/24-850/IF11/P 10/1	25.7 mm	26.3 mm	588.6 mm	595.7 mm	602.8 mm
7T8/MAS/24-840/IF11/P 10/1	25.7 mm	26.3 mm	588.6 mm	595.7 mm	602.8 mm
7T8/MAS/24-835/IF10/P 10/1	25.7 mm	26.3 mm	588.6 mm	595.7 mm	602.8 mm
7T8/MAS/24-830/IF10/P 10/1	25.7 mm	26.3 mm	588.6 mm	595.7 mm	602.8 mm
8.5T8/MAS/36-835/ IF13/P 10/1	25.7 mm	26.3 mm	893.4 mm	900.5 mm	907.6 mm
8.5T8/MAS/36-850/ IF14/P 10/1	25.7 mm	26.3 mm	893.4 mm	900.5 mm	907.6 mm
8.5T8/MAS/36-840/ IF14/P 10/1	25.7 mm	26.3 mm	893.4 mm	900.5 mm	907.6 mm
8.5T8/MAS/36-830/ IF13/P 10/1	25.7 mm	26.3 mm	893.4 mm	900.5 mm	907.6 mm
13.5T8PER/48-840/ IF22/P/DIM CAN 10/1	25.7 mm	26.3 mm	1198.1 mm	1205.2 mm	1212.3 mm
13T8/MAS/48-850/ IF21/P/DIM 10/1	25.7 mm	26.3 mm	1198.1 mm	1205.2 mm	1212.3 mm
13T8/MAS/48-840/ IF21/P/DIM 25/1	25.7 mm	26.3 mm	1198.1 mm	1205.2 mm	1212.3 mm
13T8/MAS/48-840/ IF21/P/DIM 10/1	25.7 mm	26.3 mm	1198.1 mm	1205.2 mm	1212.3 mm
13T8/MAS/48-835/ IF20/P/DIM 10/1	25.7 mm	26.3 mm	1198.1 mm	1205.2 mm	1212.3 mm
13T8/MAS/48-830/ IF20/P/DIM 10/1	25.7 mm	26.3 mm	1198.1 mm	1205.2 mm	1212.3 mm
10T8/MAS/48-840/IF16/P 25/1	25.7 mm	26.3 mm	1198.1 mm	1205.2 mm	1212.3 mm
10T8 LED/48-5000 IF 1PK 10/1	25.7 mm	26.3 mm	1198.1 mm	1205.2 mm	1212.3 mm
10T8 LED/48-4000 IF 1PK 10/1	25.7 mm	26.3 mm	1198.1 mm	1205.2 mm	1212.3 mm
10T8 LED/48-3500 IF 1PK 10/1	25.7 mm	26.3 mm	1198.1 mm	1205.2 mm	1212.3 mm
10T8 LED/48-3000 IF 1PK 10/1	25.7 mm	26.3 mm	1198.1 mm	1205.2 mm	1212.3 mm
10T8 LED/48-2700 IF 1PK 10/1	25.7 mm	26.3 mm	1198.1 mm	1205.2 mm	1212.3 mm
9.5T8/MAS/48-840/ IF16/P 25/1	25.7 mm	28 mm	1198.1 mm	1205.2 mm	1212.3 mm
9.5T8/MAS/48-835/ IF15/P 10/1	25.7 mm	28 mm	1198.1 mm	1205.2 mm	1212.3 mm
9.5T8/MAS/48-830/ IF15/P 10/1	25.7 mm	28 mm	1198.1 mm	1205.2 mm	1212.3 mm
9.5T8/MAS/48-850/ IF16/P 10/1	25.7 mm	28 mm	1198.1 mm	1205.2 mm	1212.3 mm
9.5T8/MAS/48-840/ IF16/P 10/1	25.7 mm	28 mm	1198.1 mm	1205.2 mm	1212.3 mm

Dimensional drawing

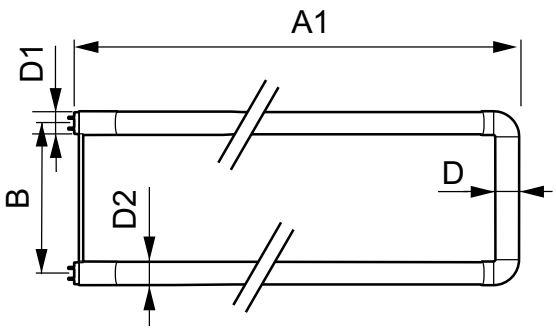

Product	D1	D2	B	A1	D
13T8 LED/24-5000 IF-6U 10/1	25.7 mm	28 mm	152 mm	570 mm	27.8 mm
13T8-6U/MAS/24-850/IF21/P 10/1	25.7 mm	28 mm	152 mm	570 mm	27.8 mm
13T8-6U/MAS/24-840/IF21/P 10/1	25.7 mm	28 mm	152 mm	570 mm	27.8 mm
13T8-6U/MAS/24-835/IF20/P 10/1	25.7 mm	28 mm	152 mm	570 mm	27.8 mm
13T8-6U/MAS/24-830/IF20/P 10/1	25.7 mm	28 mm	152 mm	570 mm	27.8 mm

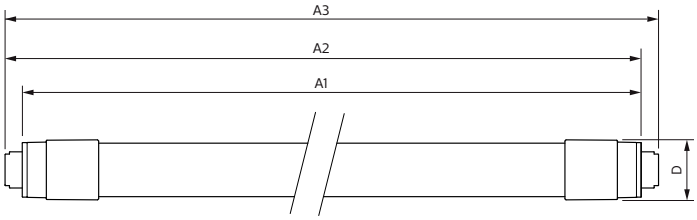

Product	D1	D2	A1	A2	A3
44T8HO/COR/96-840/ MF54/G/R17d 10/1	28 mm	27.8 mm	2369.8 mm	2378.7 mm	2387.8 mm
44T8HO/COR/96-850/ MF54/G/R17d 10/1	28 mm	27.8 mm	2369.8 mm	2378.7 mm	2387.8 mm

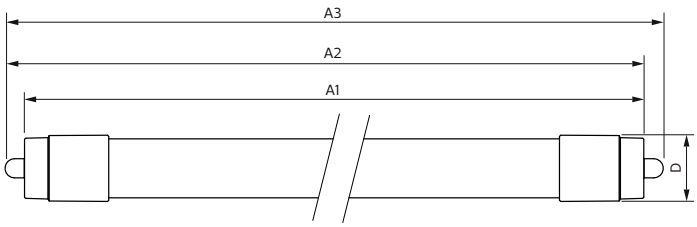

Product	D1	D2	A1	A2	A3
34T8/COR/96-850/ MF42/G/FA8 10/1	28 mm	27.9 mm	2369.8 mm	2378.7 mm	2387.8 mm
34T8/COR/96-840/ MF42/G/FA8 10/1	28 mm	27.9 mm	2369.8 mm	2378.7 mm	2387.8 mm

General Information	
Switching Cycle	50000X
Light Technical	
Llmf At End Of Nominal Lifetime (Nom)	70 %
Temperature	
T-Storage (Max)	65 °C
T-Storage (Min)	-40 °C

Approval and Application

MasterClass LEDtube InstantFit T8

Order Code	Full Product Name	Energy Consumption kWh/1000 h	Energy Efficiency Label (EEL)
469569	10T8/48-3000 IF 10/1 TAA/NAFTA	-	Not applicable
469577	10T8/48-3500 IF 10/1 TAA/NAFTA	-	-
469585	10T8/48-4000 IF 10/1 TAA/NAFTA	-	-
469593	10T8/48-5000 IF 10/1 TAA/NAFTA	-	-
469601	14T8/48-3000 IF 10/1 DIM TAA/ NAFTA	-	-
469619	14T8/48-3500 IF 10/1 DIM TAA/ NAFTA	-	Not applicable
469627	14T8/48-4000 IF 10/1 DIM TAA/ NAFTA	-	Not applicable
469635	14T8/48-5000 IF 10/1 DIM TAA/ NAFTA	-	Not applicable
468694	10T8/48-2700 IF 10/1	-	-
463158	16.5T8/LED/48/850 IF 10/1	20 kWh	A+
468652	14T8/48-3000 IF 10/1 ROT	-	-
468660	14T8/48-3500 IF 10/1 ROT	-	-
468678	14T8/48-4000 IF 10/1 ROT	-	-
468686	14T8/48-5000 IF 10/1 ROT	-	-
469239	35T8/96-3000 IF FA8 10/1	-	-
469247	35T8/96-3500 IF FA8 10/1	-	-
469254	35T8/96-4000 IF FA8 10/1	-	-
469262	35T8/96-6500 IF FA8 10/1	-	-
469304	7T8 LED/24-5000 IF 10/1	-	-
469346	9T8 LED/36-4000 IF 10/1	-	Not applicable
469353	9T8 LED/36-5000 IF 10/1	-	Not applicable
539858	8.5T8/MAS/36-830/IF13/P 10/1	-	-
539874	8.5T8/MAS/36-840/IF14/P 10/1	-	-
539882	8.5T8/MAS/36-850/IF14/P 10/1	-	-
539866	8.5T8/MAS/36-835/IF13/P 10/1	-	-
541813	7T8/MAS/24-830/IF10/P 10/1	-	-
541821	7T8/MAS/24-835/IF10/P 10/1	-	-
541839	7T8/MAS/24-840/IF11/P 10/1	-	-
541847	7T8/MAS/24-850/IF11/P 10/1	-	-
469403	13T8 LED/24-5000 IF-6U 10/1	-	-

Order Code	Full Product Name	Energy Consumption kWh/1000 h	Energy Efficiency Label (EEL)
541854	13T8-6U/MAS/24-830/IF20/P 10/1	-	-
541862	13T8-6U/MAS/24-835/IF20/P 10/1	-	-
541870	13T8-6U/MAS/24-840/IF21/P 10/1	-	-
541888	13T8-6U/MAS/24-850/IF21/P 10/1	-	-
473966	10T8 LED/48-2700 IF 1PK 10/1	-	-
473974	10T8 LED/48-3000 IF 1PK 10/1	-	-
473982	10T8 LED/48-3500 IF 1PK 10/1	-	-
473990	10T8 LED/48-4000 IF 1PK 10/1	-	-
540807	10T8/MAS/48-840/IF16/P 25/1	-	-
474007	10T8 LED/48-5000 IF 1PK 10/1	-	-
473926	13T8/MAS/48-830/IF20/P/DIM 10/1	-	-
473934	13T8/MAS/48-835/IF20/P/DIM 10/1	-	-
473942	13T8 LED/48-4000 IF DIM 1PK 10/1	-	-
533729	13.5T8PER/48-840/IF22/P/DIM CAN 10/1	-	-
473942	13T8/MAS/48-840/IF21/P/DIM 10/1	-	-
540799	13T8/MAS/48-840/IF21/P/DIM 25/1	-	-
473958	13T8 LED/48-5000 IF DIM 1PK 10/1	-	-
473958	13T8/MAS/48-850/IF21/P/DIM 10/1	-	-
473974		-	-
473982		-	-
473990		-	-
540807		-	-
474007		-	-
545178	15.5T8/MAS/48-830/IF23/P 25/1	-	-
533372	15.5T8/MAS/48-835/IF24/P 25/1	-	-
545194	15.5T8/MAS/48-840/IF25/P 25/1	-	-
545200	15.5T8/MAS/48-850/IF25/P 25/1	-	-
545269	34T8/COR/96-840/MF42/G/FA8 10/1	-	-
545277	34T8/COR/96-850/MF42/G/FA8 10/1	-	-
545285	44T8HO/COR/96-840/MF54/G/R17d 10/1	-	-
545293	44T8HO/COR/96-850/MF54/G/R17d 10/1	-	-

Controls and Dimming

Order Code	Full Product Name	Dimmable
469569	10T8/48-3000 IF 10/1 TAA/NAFTA	No
469577	10T8/48-3500 IF 10/1 TAA/NAFTA	No
469585	10T8/48-4000 IF 10/1 TAA/NAFTA	No
469593	10T8/48-5000 IF 10/1 TAA/NAFTA	No
469601	14T8/48-3000 IF 10/1 DIM TAA/NAFTA	Yes
469619	14T8/48-3500 IF 10/1 DIM TAA/NAFTA	Yes
469627	14T8/48-4000 IF 10/1 DIM TAA/NAFTA	Yes
469635	14T8/48-5000 IF 10/1 DIM TAA/NAFTA	Yes
468694	10T8/48-2700 IF 10/1	No
463158	16.5T8/LED/48/850 IF 10/1	No
468652	14T8/48-3000 IF 10/1 ROT	No
468660	14T8/48-3500 IF 10/1 ROT	No

Order Code	Full Product Name	Dimmable
468678	14T8/48-4000 IF 10/1 ROT	No
468686	14T8/48-5000 IF 10/1 ROT	No
469239	35T8/96-3000 IF FA8 10/1	No
469247	35T8/96-3500 IF FA8 10/1	No
469254	35T8/96-4000 IF FA8 10/1	No
469262	35T8/96-6500 IF FA8 10/1	No
469304	7T8 LED/24-5000 IF 10/1	No
469346	9T8 LED/36-4000 IF 10/1	No
469353	9T8 LED/36-5000 IF 10/1	No
539858	8.5T8/MAS/36-830/IF13/P 10/1	No
539874	8.5T8/MAS/36-840/IF14/P 10/1	No
539882	8.5T8/MAS/36-850/IF14/P 10/1	No

MasterClass LEDtube InstantFit T8

Order Code	Full Product Name	Dimmable
539866	8.5T8/MAS/36-835/IF13/P 10/1	No
541813	7T8/MAS/24-830/IF10/P 10/1	No
541821	7T8/MAS/24-835/IF10/P 10/1	No
541839	7T8/MAS/24-840/IF11/P 10/1	No
541847	7T8/MAS/24-850/IF11/P 10/1	No
469403	13T8 LED/24-5000 IF-6U 10/1	No
541854	13T8-6U/MAS/24-830/IF20/P 10/1	No
541862	13T8-6U/MAS/24-835/IF20/P 10/1	No
541870	13T8-6U/MAS/24-840/IF21/P 10/1	No
541888	13T8-6U/MAS/24-850/IF21/P 10/1	No
473966	10T8 LED/48-2700 IF 1PK 10/1	No
473974	10T8 LED/48-3000 IF 1PK 10/1	No
473982	10T8 LED/48-3500 IF 1PK 10/1	No
473990	10T8 LED/48-4000 IF 1PK 10/1	No
540807	10T8/MAS/48-840/IF16/P 25/1	No
474007	10T8 LED/48-5000 IF 1PK 10/1	No
473926	13T8/MAS/48-830/IF20/P/DIM 10/1	Yes
473934	13T8/MAS/48-835/IF20/P/DIM 10/1	Yes
473942	13T8 LED/48-4000 IF DIM 1PK 10/1	Yes

Order Code	Full Product Name	Dimmable
533729	13.5T8PER/48-840/IF22/P/DIM CAN 10/1	No
473942	13T8/MAS/48-840/IF21/P/DIM 10/1	Yes
540799	13T8/MAS/48-840/IF21/P/DIM 25/1	Yes
473958	13T8 LED/48-5000 IF DIM 1PK 10/1	Yes
473958	13T8/MAS/48-850/IF21/P/DIM 10/1	Yes
473974		No
473982		No
473990		No
540807		No
474007		No
545178	15.5T8/MAS/48-830/IF23/P 25/1	No
533372	15.5T8/MAS/48-835/IF24/P 25/1	No
545194	15.5T8/MAS/48-840/IF25/P 25/1	No
545200	15.5T8/MAS/48-850/IF25/P 25/1	No
545269	34T8/COR/96-840/MF42/G/FA8 10/1	No
545277	34T8/COR/96-850/MF42/G/FA8 10/1	No
545285	44T8HO/COR/96-840/MF54/G/R17d 10/1	No
545293	44T8HO/COR/96-850/MF54/G/R17d 10/1	No

Operating and Electrical

Order Code	Full Product Name	Input Frequency	Voltage (Max)	Voltage (Min)	Voltage (Nom)	Power (Rated) (Nom)	Starting Time (Nom)
469569	10T8/48-3000 IF 10/1 TAA/NAFTA	50 to 60 Hz	-	-	120-277, 347 V	10 W	0.5 s
469577	10T8/48-3500 IF 10/1 TAA/NAFTA	50 to 60 Hz	-	-	120-277, 347 V	10 W	0.5 s
469585	10T8/48-4000 IF 10/1 TAA/NAFTA	50 to 60 Hz	-	-	120-277, 347 V	10 W	0.5 s
469593	10T8/48-5000 IF 10/1 TAA/NAFTA	50 to 60 Hz	-	-	120-277, 347 V	10 W	0.5 s
469601	14T8/48-3000 IF 10/1 DIM TAA/NAFTA	50 to 60 Hz	-	-	120-277, 347 V	14 W	0.5 s
469619	14T8/48-3500 IF 10/1 DIM TAA/NAFTA	50 to 60 Hz	-	-	120-277, 347 V	14 W	0.5 s
469627	14T8/48-4000 IF 10/1 DIM TAA/NAFTA	50 to 60 Hz	-	-	120-277, 347 V	14 W	0.5 s
469635	14T8/48-5000 IF 10/1 DIM TAA/NAFTA	50 to 60 Hz	-	-	120-277, 347 V	14 W	0.5 s
468694	10T8/48-2700 IF 10/1	50 to 60 Hz	-	-	120-277, 347 V	10 W	0.5 s
463158	16.5T8/LED/48/850 IF 10/1	50 to 60 Hz	-	-	120-277 V	16.5 W	0.5 s
468652	14T8/48-3000 IF 10/1 ROT	50 to 60 Hz	-	-	120-277, 347 V	14 W	0.5 s
468660	14T8/48-3500 IF 10/1 ROT	50 to 60 Hz	-	-	120-277, 347 V	14 W	0.5 s
468678	14T8/48-4000 IF 10/1 ROT	50 to 60 Hz	-	-	120-277, 347 V	14 W	0.5 s
468686	14T8/48-5000 IF 10/1 ROT	50 to 60 Hz	-	-	120-277, 347 V	14 W	0.5 s
469239	35T8/96-3000 IF FA8 10/1	50000-64000 Hz	-	-	280-410 V	35 W	-
469247	35T8/96-3500 IF FA8 10/1	50000-64000 Hz	-	-	280-410 V	35 W	-
469254	35T8/96-4000 IF FA8 10/1	50000-64000 Hz	-	-	280-410 V	35 W	-
469262	35T8/96-6500 IF FA8 10/1	50000-64000 Hz	-	-	280-410 V	35 W	-
469304	7T8 LED/24-5000 IF 10/1	20000-120000 Hz	-	-	120-277, 347 V	7 W	0.5 s
469346	9T8 LED/36-4000 IF 10/1	20000-120000 Hz	-	-	120-277, 347 V	9 W	0.5 s
469353	9T8 LED/36-5000 IF 10/1	20000-120000 Hz	-	-	120-277, 347 V	9 W	0.5 s
539858	8.5T8/MAS/36-830/IF13/P 10/1	20K to 120K Hz	-	-	120-277, 347 V	8.5 W	0.5 s
539874	8.5T8/MAS/36-840/IF14/P 10/1	20K to 120K Hz	-	-	120-277, 347 V	8.5 W	0.5 s
539882	8.5T8/MAS/36-850/IF14/P 10/1	20K to 120K Hz	-	-	120-277, 347 V	8.5 W	0.5 s
539866	8.5T8/MAS/36-835/IF13/P 10/1	20K to 120K Hz	-	-	120-277, 347 V	8.5 W	0.5 s
541813	7T8/MAS/24-830/IF10/P 10/1	20K to 120K Hz	-	-	120-277, 347 V	7 W	0.5 s
541821	7T8/MAS/24-835/IF10/P 10/1	20K to 120K Hz	-	-	120-277, 347 V	7 W	0.5 s
541839	7T8/MAS/24-840/IF11/P 10/1	20K to 120K Hz	-	-	120-277, 347 V	7 W	0.5 s
541847	7T8/MAS/24-850/IF11/P 10/1	20K to 120K Hz	-	-	120-277, 347 V	7 W	0.5 s

MasterClass LEDtube InstantFit T8

Order Code	Full Product Name	Input Frequency	Voltage (Max)	Voltage (Min)	Voltage (Nom)	Power (Rated) (Nom)	Starting Time (Nom)
469403	13T8 LED/24-5000 IF-6U 10/1	20000-120000 Hz	-	-	120-277, 347 V	13 W	0.5 s
541854	13T8-6U/MAS/24-830/IF20/P 10/1	20K to 120K Hz	-	-	120-277, 347 V	13 W	0.5 s
541862	13T8-6U/MAS/24-835/IF20/P 10/1	20K to 120K Hz	-	-	120-277, 347 V	13 W	0.5 s
541870	13T8-6U/MAS/24-840/IF21/P 10/1	20K to 120K Hz	-	-	120-277, 347 V	13 W	0.5 s
541888	13T8-6U/MAS/24-850/IF21/P 10/1	20K to 120K Hz	-	-	120-277, 347 V	13 W	0.5 s
473966	10T8 LED/48-2700 IF 1PK 10/1	20000-120000 Hz	-	-	120-277V; 347 V	10 W	0.5 s
473974	10T8 LED/48-3000 IF 1PK 10/1	20000-120000 Hz	-	-	120-277V; 347 V	10 W	0.5 s
473982	10T8 LED/48-3500 IF 1PK 10/1	20000-120000 Hz	-	-	120-277V; 347 V	10 W	0.5 s
473990	10T8 LED/48-4000 IF 1PK 10/1	20000-120000 Hz	-	-	120-277V; 347 V	10 W	0.5 s
540807	10T8/MAS/48-840/IF16/P 25/1	20000-120000 Hz	347 V	120 V	277 V	10 W	0.5 s
474007	10T8 LED/48-5000 IF 1PK 10/1	20000-120000 Hz	-	-	120-277V; 347 V	10 W	0.5 s
473926	13T8/MAS/48-830/IF20/P/DIM 10/1	20000-120000 Hz	347 V	120 V	277 V	13 W	0.5 s
473934	13T8/MAS/48-835/IF20/P/DIM 10/1	20000-120000 Hz	347 V	120 V	277 V	13 W	0.5 s
473942	13T8 LED/48-4000 IF DIM 1PK 10/1	20000-120000 Hz	-	-	120-277V; 347 V	13 W	0.5 s
533729	13.5T8PER/48-840/IF22/P/DIM CAN 10/1	20000-120000 Hz	-	-	120-277V; 347 V	13.5 W	0.5 s
473942	13T8/MAS/48-840/IF21/P/DIM 10/1	20000-120000 Hz	347 V	120 V	277 V	13 W	0.5 s
540799	13T8/MAS/48-840/IF21/P/DIM 25/1	20000-120000 Hz	347 V	120 V	277 V	13 W	0.5 s
473958	13T8 LED/48-5000 IF DIM 1PK 10/1	20000-120000 Hz	-	-	120-277V; 347 V	13 W	0.5 s
473958	13T8/MAS/48-850/IF21/P/DIM 10/1	20000-120000 Hz	347 V	120 V	277 V	13 W	0.5 s
473974		50 to 60 Hz	-	-	120-277, 347 V	9.5 W	0.5 s
473982		50 to 60 Hz	-	-	120-277, 347 V	9.5 W	0.5 s
473990		50 to 60 Hz	-	-	120-277, 347 V	9.5 W	0.5 s
540807		50 to 60 Hz	-	-	120-277, 347 V	9.5 W	0.5 s
474007		50 to 60 Hz	-	-	120-277, 347 V	9.5 W	0.5 s
545178	15.5T8/MAS/48-830/IF23/P 25/1	50 to 60 Hz	-	-	120-277 V	15.5 W	0.5 s
533372	15.5T8/MAS/48-835/IF24/P 25/1	50 to 60 Hz	-	-	120-277 V	15.5 W	0.5 s
545194	15.5T8/MAS/48-840/IF25/P 25/1	50 to 60 Hz	-	-	120-277 V	15.5 W	0.5 s
545200	15.5T8/MAS/48-850/IF25/P 25/1	50 to 60 Hz	-	-	120-277 V	15.5 W	0.5 s
545269	34T8/COR/96-840/MF42/G/FA8 10/1	50 to 60 Hz	-	-	120-277 V	34 W	0.5 s
545277	34T8/COR/96-850/MF42/G/FA8 10/1	50 to 60 Hz	-	-	120-277 V	34 W	0.5 s
545285	44T8HO/COR/96-840/MF54/G/R17d 10/1	50 to 60 Hz	-	-	120-277 V	44 W	0.5 s
545293	44T8HO/COR/96-850/MF54/G/R17d 10/1	50 to 60 Hz	-	-	120-277 V	44 W	0.5 s

General Information

Order Code	Full Product Name	Cap-Base	Nominal Lifetime (Nom)	Rated Lifetime (Hours)
469569	10T8/48-3000 IF 10/1 TAA/NAFTA	G13	50000 h	50000 h
469577	10T8/48-3500 IF 10/1 TAA/NAFTA	G13	50000 h	50000 h
469585	10T8/48-4000 IF 10/1 TAA/NAFTA	G13	50000 h	50000 h
469593	10T8/48-5000 IF 10/1 TAA/NAFTA	G13	50000 h	50000 h
469601	14T8/48-3000 IF 10/1 DIM TAA/NAFTA	G13	50000 h	50000 h
469619	14T8/48-3500 IF 10/1 DIM TAA/NAFTA	G13	50000 h	50000 h
469627	14T8/48-4000 IF 10/1 DIM TAA/NAFTA	G13	50000 h	50000 h

Order Code	Full Product Name	Cap-Base	Nominal Lifetime (Nom)	Rated Lifetime (Hours)
469635	14T8/48-5000 IF 10/1 DIM TAA/NAFTA	G13	50000 h	50000 h
468694	10T8/48-2700 IF 10/1	G13	50000 h	50000 h
463158	16.5T8/LED/48/850 IF 10/1	G13	70000 h	70000 h
468652	14T8/48-3000 IF 10/1 ROT	G13	50000 h	50000 h
468660	14T8/48-3500 IF 10/1 ROT	G13	50000 h	50000 h
468678	14T8/48-4000 IF 10/1 ROT	G13	50000 h	50000 h
468686	14T8/48-5000 IF 10/1 ROT	G13	50000 h	50000 h
469239	35T8/96-3000 IF FA8 10/1	FA8	50000 h	50000 h
469247	35T8/96-3500 IF FA8 10/1	FA8	50000 h	50000 h
469254	35T8/96-4000 IF FA8 10/1	FA8	50000 h	50000 h
469262	35T8/96-6500 IF FA8 10/1	FA8	50000 h	50000 h
469304	7T8 LED/24-5000 IF 10/1	G13	50000 h	50000 h
469346	9T8 LED/36-4000 IF 10/1	G13	50000 h	50000 h

MasterClass LEDtube InstantFit T8

Order Code	Full Product Name	Cap-Base	Nominal Lifetime (Nom)	Rated Lifetime (Hours)
469353	9T8 LED/36-5000 IF 10/1	G13	50000 h	50000 h
539858	8.5T8/MAS/36-830/IF13/P 10/1	G13	70000 h	70000 h
539874	8.5T8/MAS/36-840/IF14/P 10/1	G13	70000 h	70000 h
539882	8.5T8/MAS/36-850/IF14/P 10/1	G13	70000 h	70000 h
539866	8.5T8/MAS/36-835/IF13/P 10/1	G13	70000 h	70000 h
541813	7T8/MAS/24-830/IF10/P 10/1	G13	70000 h	70000 h
541821	7T8/MAS/24-835/IF10/P 10/1	G13	70000 h	70000 h
541839	7T8/MAS/24-840/IF11/P 10/1	G13	70000 h	70000 h
541847	7T8/MAS/24-850/IF11/P 10/1	G13	70000 h	70000 h
469403	13T8 LED/24-5000 IF-6U 10/1	G13	50000 h	50000 h
541854	13T8-6U/MAS/24-830/IF20/P 10/1	G13	70000 h	70000 h
541862	13T8-6U/MAS/24-835/IF20/P 10/1	G13	70000 h	70000 h
541870	13T8-6U/MAS/24-840/IF21/P 10/1	G13	70000 h	70000 h
541888	13T8-6U/MAS/24-850/IF21/P 10/1	G13	70000 h	70000 h
473966	10T8 LED/48-2700 IF 1PK 10/1	G13	70000 h	70000 h
473974	10T8 LED/48-3000 IF 1PK 10/1	G13	70000 h	70000 h
473982	10T8 LED/48-3500 IF 1PK 10/1	G13	70000 h	70000 h
473990	10T8 LED/48-4000 IF 1PK 10/1	G13	70000 h	70000 h
540807	10T8/MAS/48-840/IF16/P 25/1	G13	70000 h	70000 h
474007	10T8 LED/48-5000 IF 1PK 10/1	G13	70000 h	70000 h
473926	13T8/MAS/48-830/IF20/P/DIM 10/1	G13	70000 h	70000 h
473934	13T8/MAS/48-835/IF20/P/DIM 10/1	G13	70000 h	70000 h
473942	13T8 LED/48-4000 IF DIM 1PK 10/1	G13	70000 h	70000 h
533729	13.5T8PER/48-840/IF22/P/DIM CAN 10/1	G13	70000 h	70000 h

Order Code	Full Product Name	Cap-Base	Nominal Lifetime (Nom)	Rated Lifetime (Hours)
473942	13T8/MAS/48-840/IF21/P/DIM 10/1	G13	70000 h	70000 h
540799	13T8/MAS/48-840/IF21/P/DIM 25/1	G13	70000 h	70000 h
473958	13T8 LED/48-5000 IF DIM 1PK 10/1	G13	70000 h	70000 h
473958	13T8/MAS/48-850/IF21/P/DIM 10/1	G13	70000 h	70000 h
473974		G13	70000 h	70000 h
473982		G13	70000 h	70000 h
473990		G13	70000 h	70000 h
540807		G13	70000 h	70000 h
474007		G13	70000 h	70000 h
545178	15.5T8/MAS/48-830/IF23/P 25/1	G13	70000 h	70000 h
533372	15.5T8/MAS/48-835/IF24/P 25/1	G13	70000 h	70000 h
545194	15.5T8/MAS/48-840/IF25/P 25/1	G13	70000 h	70000 h
545200	15.5T8/MAS/48-850/IF25/P 25/1	G13	70000 h	70000 h
545269	34T8/COR/96-840/ MF42/G/FA8 10/1	FA8	50000 h	50000 h
545277	34T8/COR/96-850/ MF42/G/FA8 10/1	FA8	50000 h	50000 h
545285	44T8HO/COR/96-840/ MF54/G/R17d 10/1	R17D	50000 h	50000 h
545293	44T8HO/COR/96-850/ MF54/G/R17d 10/1	R17D	50000 h	50000 h

Light Technical

Order Code	Full Product Name	Beam Angle (Nom)	Color Code	Correlated Color Temperature (Nom)	Color Rendering Index (Nom)	Luminous Flux (Nom)	Luminous Flux (Rated) (Nom)	Rated Beam Angle
469569	10T8/48-3000 IF 10/1 TAA/NAFTA	-	830	3000 K	82	1500 lm	1500 lm	-
469577	10T8/48-3500 IF 10/1 TAA/NAFTA	-	835	3500 K	82	1500 lm	1500 lm	-
469585	10T8/48-4000 IF 10/1 TAA/NAFTA	-	841	4000 K	82	1600 lm	1600 lm	-
469593	10T8/48-5000 IF 10/1 TAA/NAFTA	-	850	5000 K	82	1600 lm	1600 lm	-
469601	14T8/48-3000 IF 10/1 DIM TAA/NAFTA	-	830	3000 K	82	2000 lm	2000 lm	-
469619	14T8/48-3500 IF 10/1 DIM TAA/NAFTA	-	835	3500 K	82	2000 lm	2000 lm	-
469627	14T8/48-4000 IF 10/1 DIM TAA/NAFTA	-	841	4000 K	82	2100 lm	2100 lm	-
469635	14T8/48-5000 IF 10/1 DIM TAA/NAFTA	-	850	5000 K	82	2100 lm	2100 lm	-
468694	10T8/48-2700 IF 10/1	-	827	2700 K	82	1400 lm	1400 lm	-
463158	16.5T8/LED/48/850 IF 10/1	160 °	850	5000 K	82	2500 lm	2500 lm	160 °
468652	14T8/48-3000 IF 10/1 ROT	-	830	3000 K	82	2000 lm	2000 lm	-
468660	14T8/48-3500 IF 10/1 ROT	-	835	3500 K	82	2000 lm	2000 lm	-

MasterClass LEDtube InstantFit T8

Order Code	Full Product Name	Beam Angle (Nom)	Color Code	Correlated Color Temperature (Nom)	Color Rendering Index (Nom)	Luminous Flux (Nom)	Luminous Flux (Rated) (Nom)	Rated Beam Angle
468678	14T8/48-4000 IF 10/1 ROT	-	841	4000 K	82	2100 lm	2100 lm	-
468686	14T8/48-5000 IF 10/1 ROT	-	850	5000 K	82	2100 lm	2100 lm	-
469239	35T8/96-3000 IF FA8 10/1	-	830	3000 K	82	3900 lm	3900 lm	-
469247	35T8/96-3500 IF FA8 10/1	-	835	3500 K	82	4000 lm	4000 lm	-
469254	35T8/96-4000 IF FA8 10/1	-	841	4000 K	82	4200 lm	4200 lm	-
469262	35T8/96-6500 IF FA8 10/1	-	865	6500 K	82	4200 lm	4200 lm	-
469304	7T8 LED/24-5000 IF 10/1	-	850	5000 K	82	1150 lm	1150 lm	-
469346	9T8 LED/36-4000 IF 10/1	-	841	4000 K	82	1200 lm	1200 lm	-
469353	9T8 LED/36-5000 IF 10/1	-	850	5000 K	82	1200 lm	1200 lm	-
539858	8.5T8/MAS/36-830/IF13/P 10/1	180 °	830	3000 K	80	1300 lm	1300 lm	180 °
539874	8.5T8/MAS/36-840/IF14/P 10/1	180 °	841	4000 K	80	1400 lm	1400 lm	180 °
539882	8.5T8/MAS/36-850/IF14/P 10/1	180 °	850	5000 K	80	1400 lm	1400 lm	180 °
539866	8.5T8/MAS/36-835/IF13/P 10/1	180 °	835	3500 K	80	1300 lm	1300 lm	180 °
541813	7T8/MAS/24-830/IF10/P 10/1	180 °	830	3000 K	80	1100 lm	1100 lm	180 °
541821	7T8/MAS/24-835/IF10/P 10/1	180 °	835	3500 K	80	1100 lm	1100 lm	180 °
541839	7T8/MAS/24-840/IF11/P 10/1	180 °	841	4000 K	80	1150 lm	1150 lm	180 °
541847	7T8/MAS/24-850/IF11/P 10/1	180 °	850	5000 K	80	1150 lm	1150 lm	180 °
469403	13T8 LED/24-5000 IF-6U 10/1	-	850	5000 K	82	2100 lm	2100 lm	-
541854	13T8-6U/MAS/24-830/IF20/P 10/1	180 °	830	3000 K	80	2000 lm	2000 lm	180 °
541862	13T8-6U/MAS/24-835/IF20/P 10/1	180 °	835	3500 K	80	2000 lm	2000 lm	180 °
541870	13T8-6U/MAS/24-840/IF21/P 10/1	180 °	841	4000 K	80	2100 lm	2100 lm	180 °
541888	13T8-6U/MAS/24-850/IF21/P 10/1	180 °	850	5000 K	80	2100 lm	2100 lm	180 °
473966	10T8 LED/48-2700 IF 1PK 10/1	-	827	2700 K	82	1400 lm	1400 lm	-
473974	10T8 LED/48-3000 IF 1PK 10/1	-	830	3000 K	82	1500 lm	1500 lm	-
473982	10T8 LED/48-3500 IF 1PK 10/1	-	835	3500 K	82	1500 lm	1500 lm	-
473990	10T8 LED/48-4000 IF 1PK 10/1	-	841	4000 K	82	1600 lm	1600 lm	-
540807	10T8/MAS/48-840/IF16/P 25/1	-	841	4000 K	82	1600 lm	1600 lm	-
474007	10T8 LED/48-5000 IF 1PK 10/1	-	850	5000 K	82	1600 lm	1600 lm	-
473926	13T8/MAS/48-830/IF20/P/DIM 10/1	-	830	3000 K	82	2000 lm	2000 lm	-
473934	13T8/MAS/48-835/IF20/P/DIM 10/1	-	835	3500 K	82	2000 lm	2000 lm	-
473942	13T8 LED/48-4000 IF DIM 1PK 10/1	-	841	4000 K	82	2100 lm	2100 lm	-
533729	13.5T8PER/48-840/IF22/P/DIM CAN 10/1	-	841	4000 K	82	2200 lm	2200 lm	-
473942	13T8/MAS/48-840/IF21/P/DIM 10/1	-	841	4000 K	82	2100 lm	2100 lm	-
540799	13T8/MAS/48-840/IF21/P/DIM 25/1	-	841	4000 K	82	2100 lm	2100 lm	-
473958	13T8 LED/48-5000 IF DIM 1PK 10/1	-	850	5000 K	82	2100 lm	2100 lm	-
473958	13T8/MAS/48-850/IF21/P/DIM 10/1	-	850	5000 K	82	2100 lm	2100 lm	-
473974		180 °	830	3000 K	80	1500 lm	1500 lm	180 °
473982		180 °	835	3500 K	80	1500 lm	1500 lm	180 °
473990		180 °	841	4000 K	80	1600 lm	1600 lm	180 °
540807		180 °	841	4000 K	80	1500 lm	1500 lm	180 °
474007		180 °	850	5000 K	80	1600 lm	1600 lm	180 °
545178	15.5T8/MAS/48-830/IF23/P 25/1	180 °	830	3000 K	80	2300 lm	2300 lm	180 °
533372	15.5T8/MAS/48-835/IF24/P 25/1	180 °	835	3500 K	80	2400 lm	2400 lm	180 °
545194	15.5T8/MAS/48-840/IF25/P 25/1	180 °	841	4000 K	80	2500 lm	2500 lm	180 °
545200	15.5T8/MAS/48-850/IF25/P 25/1	180 °	850	5000 K	80	2500 lm	2500 lm	180 °
545269	34T8/COR/96-840/MF42/G/FA8 10/1	240 °	841	4000 K	82	4200 lm	4200 lm	240 °
545277	34T8/COR/96-850/MF42/G/FA8 10/1	240 °	850	5000 K	82	4200 lm	4200 lm	240 °
545285	44T8HO/COR/96-840/MF54/G/R17d 10/1	240 °	841	4000 K	82	5400 lm	5400 lm	240 °

MasterClass LEDtube InstantFit T8

Order Code	Full Product Name	Beam Angle (Nom)	Color Code	Correlated Color Temperature (Nom)	Color Rendering Index (Nom)	Luminous Flux (Nom)	Luminous Flux (Rated) (Nom)	Rated Beam Angle
545293	44T8HO/COR/96-850/MF54/G/R17d 10/1	240 °	850	5000 K	82	5400 lm	5400 lm	240 °

Temperature

Order Code	Full Product Name	T-Ambient (Max)	T-Ambient (Min)	T-Case Maximum (Nom)
469569	10T8/48-3000 IF 10/1 TAA/NAFTA	45 °C	-20 °C	40 °C
469577	10T8/48-3500 IF 10/1 TAA/NAFTA	45 °C	-20 °C	40 °C
469585	10T8/48-4000 IF 10/1 TAA/NAFTA	45 °C	-20 °C	40 °C
469593	10T8/48-5000 IF 10/1 TAA/NAFTA	45 °C	-20 °C	40 °C
469601	14T8/48-3000 IF 10/1 DIM TAA/NAFTA	45 °C	-20 °C	45 °C
469619	14T8/48-3500 IF 10/1 DIM TAA/NAFTA	45 °C	-20 °C	45 °C
469627	14T8/48-4000 IF 10/1 DIM TAA/NAFTA	45 °C	-20 °C	45 °C
469635	14T8/48-5000 IF 10/1 DIM TAA/NAFTA	45 °C	-20 °C	45 °C
468694	10T8/48-2700 IF 10/1	45 °C	-20 °C	40 °C
463158	16.5T8/LED/48/850 IF 10/1	-	-	45 °C
468652	14T8/48-3000 IF 10/1 ROT	45 °C	-20 °C	45 °C
468660	14T8/48-3500 IF 10/1 ROT	45 °C	-20 °C	45 °C
468678	14T8/48-4000 IF 10/1 ROT	45 °C	-20 °C	45 °C
468686	14T8/48-5000 IF 10/1 ROT	45 °C	-20 °C	45 °C
469239	35T8/96-3000 IF FA8 10/1	-	-	-
469247	35T8/96-3500 IF FA8 10/1	-	-	-
469254	35T8/96-4000 IF FA8 10/1	-	-	-
469262	35T8/96-6500 IF FA8 10/1	-	-	-
469304	7T8 LED/24-5000 IF 10/1	45 °C	-20 °C	50 °C
469346	9T8 LED/36-4000 IF 10/1	45 °C	-20 °C	50 °C
469353	9T8 LED/36-5000 IF 10/1	45 °C	-20 °C	50 °C
539858	8.5T8/MAS/36-830/IF13/P 10/1	45 °C	-20 °C	50 °C
539874	8.5T8/MAS/36-840/IF14/P 10/1	45 °C	-20 °C	50 °C
539882	8.5T8/MAS/36-850/IF14/P 10/1	45 °C	-20 °C	50 °C
539866	8.5T8/MAS/36-835/IF13/P 10/1	45 °C	-20 °C	50 °C
541813	7T8/MAS/24-830/IF10/P 10/1	45 °C	-20 °C	50 °C
541821	7T8/MAS/24-835/IF10/P 10/1	45 °C	-20 °C	50 °C

Order Code	Full Product Name	T-Ambient (Max)	T-Ambient (Min)	T-Case Maximum (Nom)
541839	7T8/MAS/24-840/IF11/P 10/1	45 °C	-20 °C	50 °C
541847	7T8/MAS/24-850/IF11/P 10/1	45 °C	-20 °C	50 °C
469403	13T8 LED/24-5000 IF-6U 10/1	45 °C	-20 °C	50 °C
541854	13T8-6U/MAS/24-830/IF20/P 10/1	45 °C	-20 °C	50 °C
541862	13T8-6U/MAS/24-835/IF20/P 10/1	45 °C	-20 °C	50 °C
541870	13T8-6U/MAS/24-840/IF21/P 10/1	45 °C	-20 °C	50 °C
541888	13T8-6U/MAS/24-850/IF21/P 10/1	45 °C	-20 °C	50 °C
473966	10T8 LED/48-2700 IF 1PK 10/1	45 °C	-20 °C	50 °C
473974	10T8 LED/48-3000 IF 1PK 10/1	45 °C	-20 °C	50 °C
473982	10T8 LED/48-3500 IF 1PK 10/1	45 °C	-20 °C	50 °C
473990	10T8 LED/48-4000 IF 1PK 10/1	45 °C	-20 °C	50 °C
540807	10T8/MAS/48-840/IF16/P 25/1	45 °C	-20 °C	50 °C
474007	10T8 LED/48-5000 IF 1PK 10/1	45 °C	-20 °C	50 °C
473926	13T8/MAS/48-830/IF20/P/DIM 10/1	45 °C	-20 °C	50 °C
473934	13T8/MAS/48-835/IF20/P/DIM 10/1	45 °C	-20 °C	50 °C
473942	13T8 LED/48-4000 IF DIM 1PK 10/1	45 °C	-20 °C	50 °C
533729	13.5T8PER/48-840/IF22/P/DIM CAN 10/1	45 °C	-20 °C	50 °C
473942	13T8/MAS/48-840/IF21/P/DIM 10/1	45 °C	-20 °C	50 °C
540799	13T8/MAS/48-840/IF21/P/DIM 25/1	45 °C	-20 °C	50 °C
473958	13T8 LED/48-5000 IF DIM 1PK 10/1	45 °C	-20 °C	50 °C
473958	13T8/MAS/48-850/IF21/P/DIM 10/1	45 °C	-20 °C	50 °C

MasterClass LEDtube InstantFit T8

Order Code	Full Product Name	T-Ambient (Max)	T-Ambient (Min)	T-Case Maximum (Nom)
473974		55 °C	-20 °C	55 °C
473982		55 °C	-20 °C	55 °C
473990		55 °C	-20 °C	55 °C
540807		55 °C	-20 °C	55 °C
474007		55 °C	-20 °C	55 °C
545178	15.5T8/MAS/48-830/IF23/P 25/1	55 °C	-20 °C	50 °C
533372	15.5T8/MAS/48-835/IF24/P 25/1	55 °C	-20 °C	50 °C
545194	15.5T8/MAS/48-840/IF25/P 25/1	55 °C	-20 °C	50 °C
545200	15.5T8/MAS/48-850/IF25/P 25/1	55 °C	-20 °C	50 °C
545269	34T8/COR/96-840/ MF42/G/FA8 10/1	45 °C	-20 °C	45 °C
545277	34T8/COR/96-850/ MF42/G/FA8 10/1	45 °C	-20 °C	45 °C
545285	44T8HO/COR/96-840/ MF54/G/R17d 10/1	45 °C	-20 °C	55 °C
545293	44T8HO/COR/96-850/ MF54/G/R17d 10/1	45 °C	-20 °C	55 °C

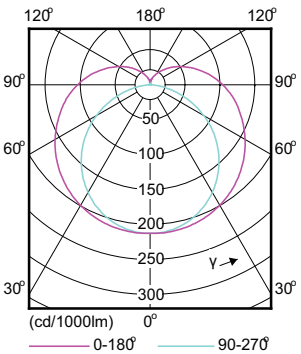

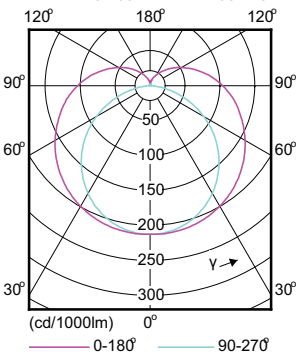

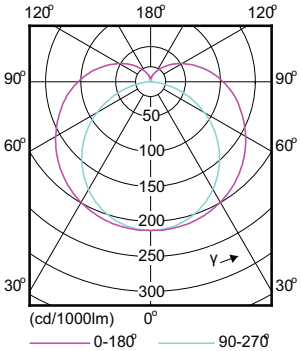

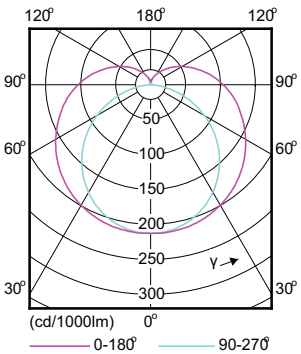

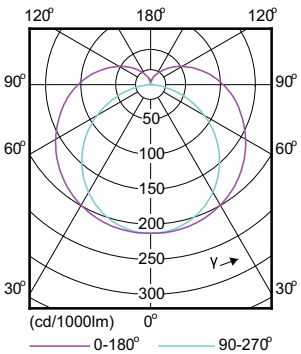

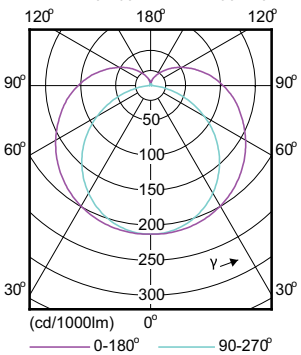

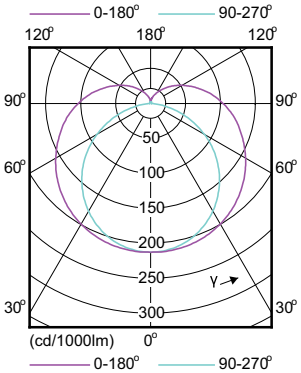

MasterClass LEDtube InstantFit T8

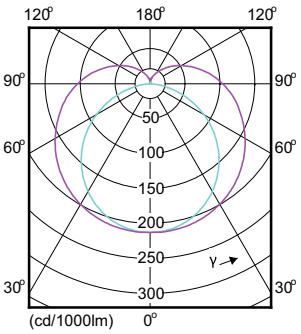

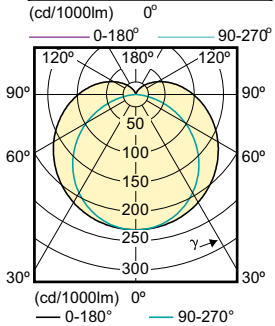

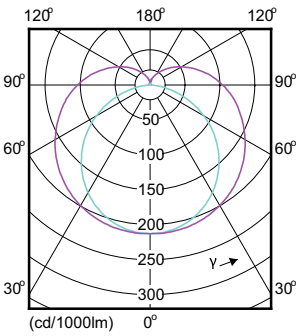

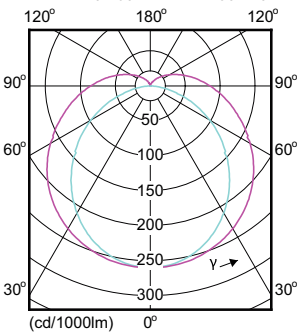

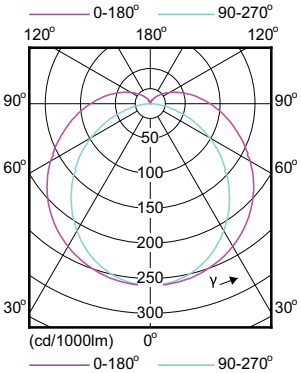

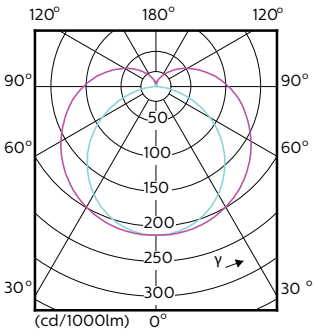

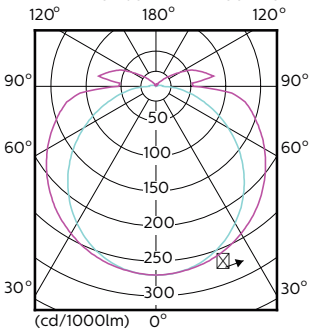

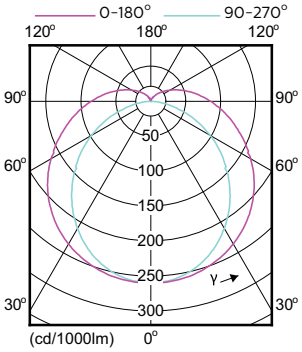

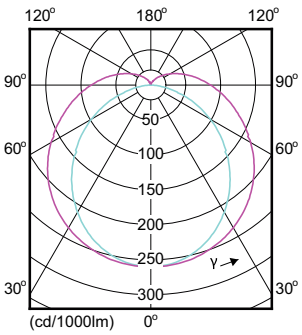

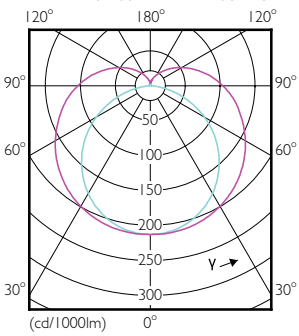

MasterClass LEDtube InstantFit T8

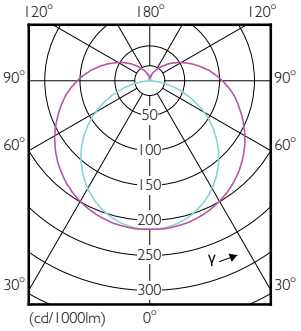

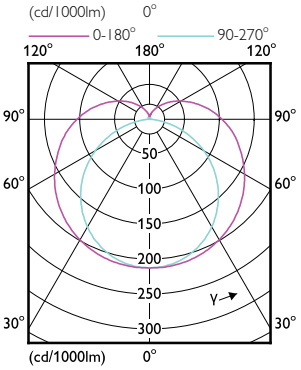

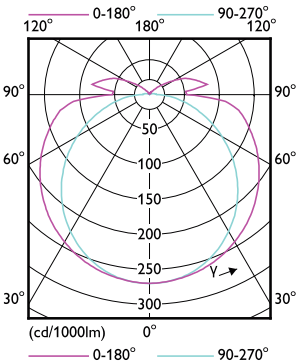

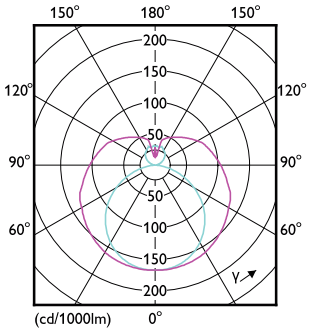

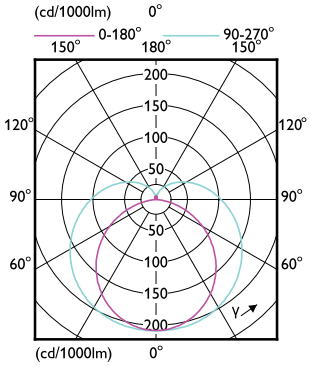

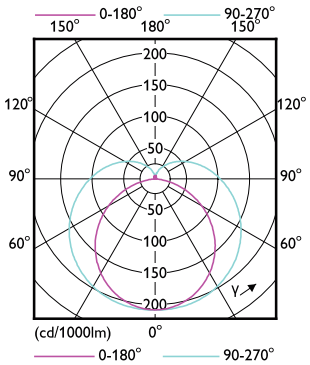

© 2019 Signify Holding All rights reserved. Signify does not give any representation or warranty as to the accuracy or completeness of the information included herein and shall not be liable for any action in reliance thereon. The information presented in this document is not intended as any commercial offer and does not form part of any quotation or contract, unless otherwise agreed by Signify. All trademarks are owned by Signify Holding or their respective owners.