MR16/GU10/PAR16 LED

7.3MR16/LED/827/F25/DIM 12V 10/1FB

Philips MR16 Dimmable LED Lamps provide ambient level light to illuminate hard to maintain applications. Increased transformer compatability allows for operation on a wider range of transformers. Available in dimmable and non-dimmable versions, these lamps are ideal for track and open recessed fixtures in retail, hospitality and residential spaces.

Product data

General Information	
Cap-Base	GU5.3 [GU5.3]
RoHS mark	RoHS mark
Nominal Lifetime (Nom)	25000 h
Switching Cycle	50000X
Technical Type	7.3-50W

Light Technical	
Color Code	827 [CCT of 2700K]
Beam Angle (Nom)	25 °
Initial lumen (Nom)	515 lm
Luminous Flux (Rated) (Nom)	515 lm
Luminous Intensity (Nom)	2400 cd
Color Designation	Warm White (WW)
Rated Beam Angle	25 °
Correlated Color Temperature (Nom)	2700 K
Luminous Efficacy (rated) (Nom)	70.00 lm/W
Color Consistency	<4
Color Rendering Index (Nom)	80
LLMF At End Of Nominal Lifetime (Nom)	70 %

Operating and Electrical	
Power (Rated) (Nom)	7.3 W
Lamp Current (Nom)	830 mA
Wattage Equivalent	50 W
Starting Time (Nom)	0.5 s
Warm Up Time to 60% Light (Nom)	0.5 s
Power Factor (Nom)	0.7
Voltage (Nom)	ac electronic 12 V

Temperature	
T-Case Maximum (Nom)	90 °C

Controls and Dimming	
Dimmable	Yes

Approval and Application	
Suitable For Accent Lighting	Yes

MR16/GU10/PAR16 LED

Product Data	
Order product name	7.3MR16/LED/827/F25/DIM 12V 10/1FB
EAN/UPC - Product	046677533113
Order code	533117
Numerator - Quantity Per Pack	1

Numerator - Packs per outer box	10
Material Nr. (12NC)	929001880704
Net Weight (Piece)	0.052 kg

Dimensional drawing

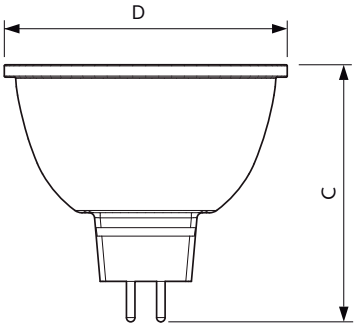

Product	D	C
7.3MR16/LED/827/F25/DIM 12V 10/1FB	50.5 mm	46.5 mm

MR16 12V 7-35W 400lm 25D 2700K GU5.3 D

Photometric data

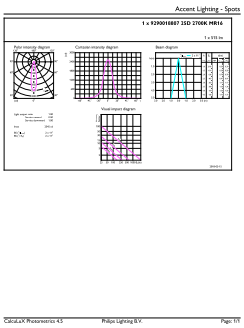

LEDspot 7.3W GU5.3 MR16 827 25D DIM

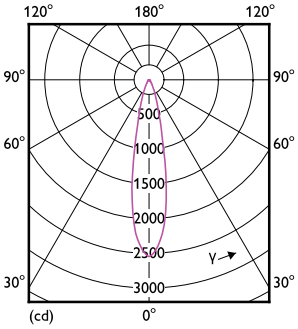

LEDspot 7.3W GU5.3 MR16 827 25D DIM

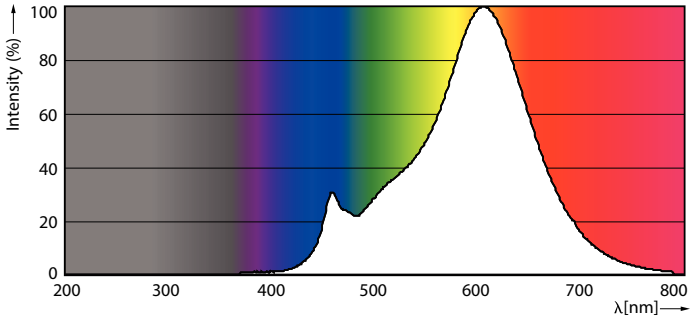

LEDspot 7.3W GU5.3 MR16 827 25-35D DIM

MR16/GU10/PAR16 LED

Lifetime

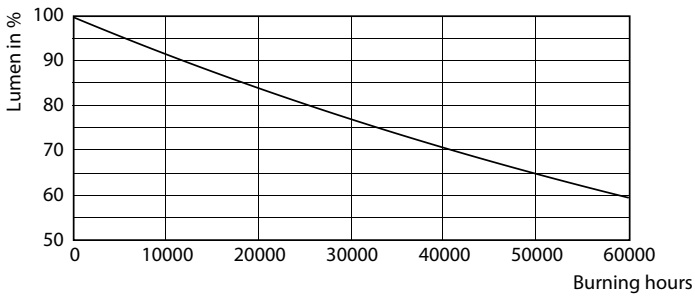

7-50W GU5-3 MR16

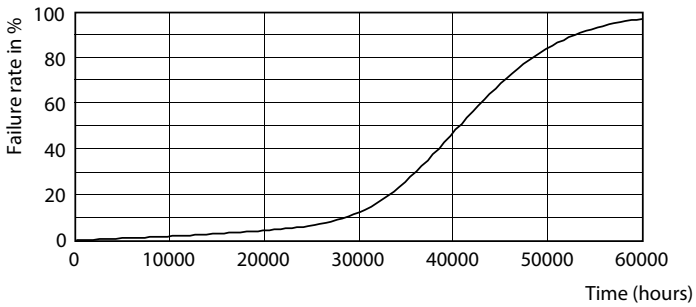

7-50W GU5-3 MR16

© 2019 Signify Holding All rights reserved. Signify does not give any representation or warranty as to the accuracy or completeness of the information included herein and shall not be liable for any action in reliance thereon. The information presented in this document is not intended as any commercial offer and does not form part of any quotation or contract, unless otherwise agreed by Signify. Philips and the Philips Shield Emblem are registered trademarks of Koninklijke Philips N.V.