MR16/GU10/PAR16 LED

Philips MR16 Dimmable LED Lamps provide ambient level light to illuminate hard to maintain applications. Increased transformer compatability allows for operation on a wider range of transformers. Available in dimmable and non-dimmable versions, these lamps are ideal for track and open recessed fixtures in retail, hospitality and residential spaces.

Product data

General Information	
Cap-Base	GU5.3 [GU5.3]
Nominal Lifetime (Nom)	25000 h
Switching Cycle	50000X
Technical Type	8.5-75W

Light Technical	
Color Code	827 [CCT of 2700K]
Beam Angle (Nom)	35 °
Initial lumen (Nom)	600 lm
Luminous Flux (Rated) (Nom)	600 lm
Luminous Intensity (Nom)	1700 cd
Color Designation	Warm White (WW)
Rated Beam Angle	35 °
Correlated Color Temperature (Nom)	2700 K
Luminous Efficacy (rated) (Nom)	70.00 lm/W
Color Consistency	<4
Color Rendering Index (Nom)	80
LLMF At End Of Nominal Lifetime (Nom)	70 %

Operating and Electrical	
Power (Rated) (Nom)	8.5 W
Lamp Current (Nom)	960 mA
Wattage Equivalent	75 W
Starting Time (Nom)	0.5 s
Warm Up Time to 60% Light (Nom)	0.5 s
Power Factor (Nom)	0.7
Voltage (Nom)	ac electronic 12 V

Temperature	
T-Case Maximum (Nom)	100 °C

Controls and Dimming	
Dimmable	Yes

Approval and Application	
Suitable For Accent Lighting	Yes

Product Data	
Order product name	8.5MR16/LED/827/F35/DIM 12V 10/1FB
EAN/UPC - Product	046677533182
Order code	533182
Numerator - Quantity Per Pack	1
Numerator - Packs per outer box	10
Material Nr. (12NC)	929001881604
Net Weight (Piece)	0.052 kg

MR16/GU10/PAR16 LED

Dimensional drawing

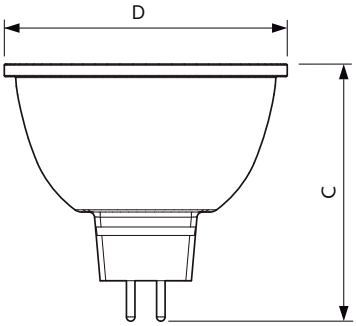

Product	D	C
8.5MR16/LED/827/F35/DIM 12V 10/1FB	50.5 mm	46.5 mm

MR16 12V 8-50W 621lm 36D 2700K GU5.3 D

Photometric data

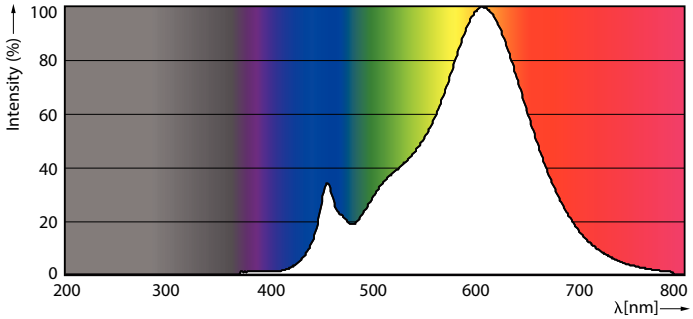

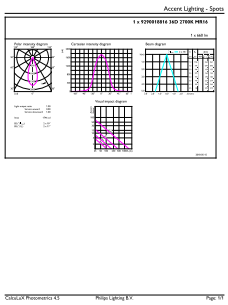

8-50W GU5-3 MR16

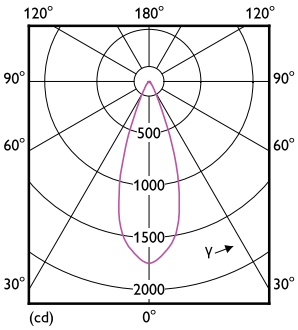

8-50W GU5-3 MR16 36D 827 2700K

Lifetime

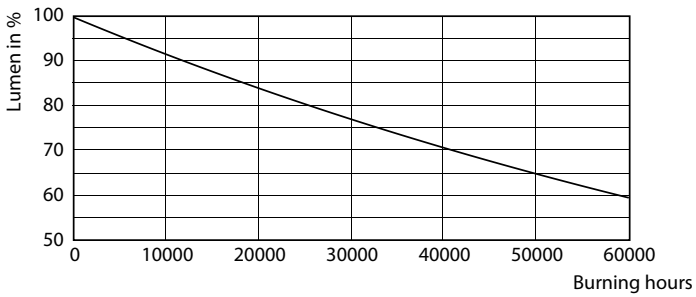

7-50W GU5-3 MR16

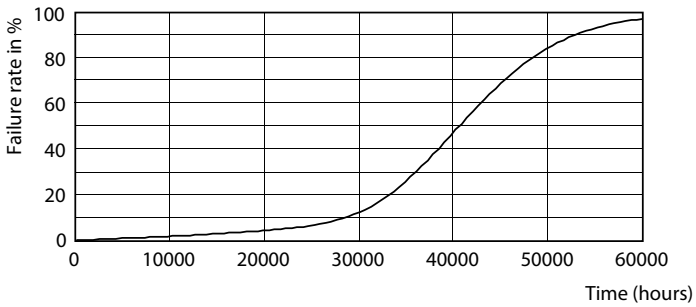

7-50W GU5-3 MR16

© 2018 Philips Lighting Holding B.V. All rights reserved. Philips Lighting reserves the right to make changes in specifications and/or to discontinue any product at any timewithout notice or obligation and will not be liable for any consequences resulting from the use of this publication.