COMPACT FLUORESCENT

COMPACT FLUORESCENT LAMPS FOR GENERAL LIGHTING

USHIO Compact Fluorescent lamps provide all the benefits of linear fluorescent lamps in a compact size. These lamps are highly efficient at 67 lumens per watt and 10,000 hours average life.

The tri-phosphor coatings on these lamps render colors closer to that of nature allowing a coloring index of 82 in a variety of color temperatures.

Available in single, double and triple tubes with wattages ranging from 5 watts to 42 watts. Color temperatures range from 2700K to 6500K.

FEATURES & BENEFITS:

- Long Life - 10,000 Hours Average Life
  - Reduces Costs of Lamp Change-Outs
  - At Least Ten Times the Life of Ordinary Incandescent Lamps
- High Color Rendering - 82 CRI
- High Efficacy - 67 Lumens Per Watt
- Saves Up to 75% in Electricity Costs Compared to Standard Incandescent Lamps
- Available in Dimmable Versions, 4-Pin Base

APPLICATIONS:

- Downlights in Offices, Hotels, Retail Establishments
- Task Lighting
- Security
- Enclosed Outdoor Fixtures

USHIO

COMPACT FLUORESCENT SINGLE TUBE

Single Tube Compact Fluorescent Lamps

Color Rendering Index:
82 CRI

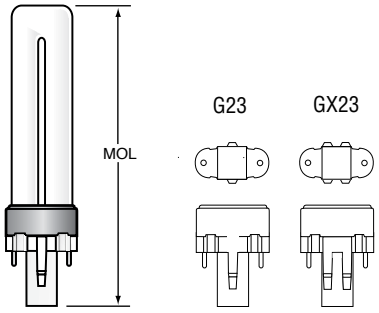

(1) 2-Pin Base

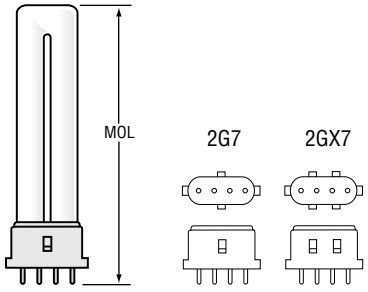

(2) 4-Pin Base

Case Quantity: 50

Watts (W)	Ordering Code	Lamp Description	Base	Volts (V)	Lamp Current (A)	Luminous Flux Nom. (lm)	Luminous Flux Min. (lm)	Color Temp (K)	Dimensions MOL (mm)	Dimensions MOL (in)	Avg* Rated Life (h)	Commercial Life** (h)
		Ultra-S™ Single Tube, 2-Pin Base (1)										
5	3000062	CF5S/827	G23	35	0.180	250	230	2700	108	4.3	10000	12500
5	3000147	CF5S/841	G23	35	0.180	250	230	4100	108	4.3	10000	12500
7	3000063	CF7S/827	G23	45	0.180	400	360	2700	138	5.4	10000	12500
7	3000064	CF7S/841	G23	45	0.180	400	360	4100	138	5.4	10000	12500
9	3000066	CF9S/827	G23	59	0.180	600	540	2700	168	6.6	10000	12500
9	3000060	CF9S/835	G23	59	0.180	600	540	3500	168	6.6	10000	12500
9	3000067	CF9S/841	G23	59	0.180	600	540	4100	168	6.6	10000	12500
13	3000054	CF13S/827	GX23	59	0.285	800	720	2700	180	7.1	10000	12500
13	3000057	CF13S/835	GX23	59	0.285	800	720	3500	180	7.1	10000	12500
13	3000055	CF13S/841	GX23	59	0.285	800	720	4100	180	7.1	10000	12500
13	3000427	CF13S/850	GX23	59	0.285	800	720	5000	180	7.1	10000	12500
13	3000167	CF13S/865	GX23	59	0.285	760	690	6500	180	7.1	10000	12500
		Ultra-SE™ Single Tube, 4-Pin Base for Electronic Ballasts – Dimmable (2)										
5	3000168	CF5SE/827	2G7	35	0.180	250	230	2700	85	3.4	10000	12500
7	3000169	CF7SE/827	2G7	47	0.175	400	360	2700	115	4.5	10000	12500
7	3000175	CF7SE/841	2G7	47	0.175	400	360	4100	115	4.5	10000	12500
9	3000170	CF9SE/827	2G7	60	0.170	600	540	2700	145	5.7	10000	12500
9	3000178	CF9SE/841	2G7	60	0.170	600	540	4100	145	5.7	10000	12500
13	3000171	CF13SE/827	2GX7	59	0.285	800	720	2700	160	6.3	10000	12500
13	3000251	CF13SE/830	2GX7	59	0.285	800	720	3000	160	6.5	10000	12500
13	3000182	CF13SE/835	2GX7	59	0.285	800	720	3500	160	6.5	10000	12500
13	3000181	CF13SE/841	2GX7	59	0.285	800	720	4100	160	6.5	10000	12500

* Based on ANSI / IESNA standards of 3 hours per start
** Based on estimated commercial operating standards of 12 hours per start

All dimensions shown in inches unless otherwise noted.

When using dimmers, dimming systems, or occupancy sensors, the lamp life will also be affected.
The dimming system manufacturer can advise the affect of their system on lamp life.

USHIO

Hg contains mercury
contient du mercure

Manage in Accord with Disposal Laws
www.lamprecycle.org 1-800-895-8842

COMPACT FLUORESCENT DOUBLE TUBE

Double Tube Compact Fluorescent Lamps

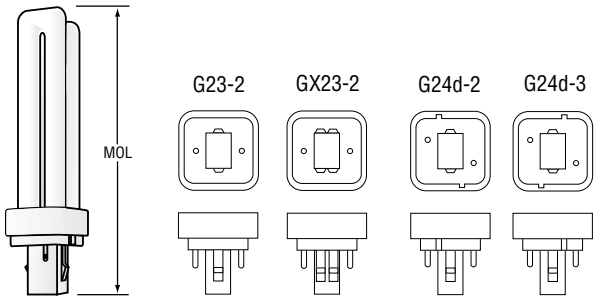

(3) 2-Pin Base

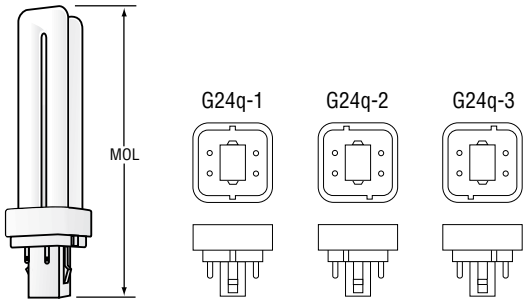

(4) 4-Pin Base

Case Quantity: 50

Watts (W)	Ordering Code	Lamp Description	Base	Volts (V)	Lamp Current (A)	Luminous Flux Nom. (lm)	Luminous Flux Min. (lm)	Color Temp (K)	Dimensions MOL (mm)	Dimensions MOL (in)	Avg * Rated Life (h)	Commercial Life** (h)
		Ultra-D™ Double Tube, 2-Pin Base (3)										
9	3000065	CF9D/827	G23-2	59	0.180	525	475	2700	108	4.3	10000	12500
9	3000139	CF9D/835	G23-2	59	0.180	525	475	3500	108	4.3	10000	12500
9	3000184	CF9D/841	G23-2	59	0.180	525	475	4100	108	4.3	10000	12500
13	3000052	CF13D/827	GX23-2	59	0.285	780	700	2700	118	4.7	10000	12500
13	3000053	CF13D/835	GX23-2	59	0.285	780	700	3500	118	4.7	10000	12500
13	3000140	CF13D/841	GX23-2	59	0.285	780	700	4100	118	4.7	10000	12500
18	3000135	CF18D/827	G24d-2	100	0.220	1200	1080	2700	153	6.0	10000	12500
18	3000145	CF18D/835	G24d-2	100	0.220	1200	1080	3500	153	6.0	10000	12500
18	3000141	CF18D/841	G24d-2	100	0.220	1200	1080	4100	153	6.0	10000	12500
26	3000058	CF26D/827	G24d-3	105	0.325	1800	1620	2700	172	6.9	10000	12500
26	3000146	CF26D/835	G24d-3	105	0.325	1800	1620	3500	172	6.9	10000	12500
26	3000142	CF26D/841	G24d-3	105	0.325	1800	1620	4100	172	6.9	10000	12500
26	3000196	CF26D/865	G24d-3	105	0.325	1710	1540	6500	172	6.9	10000	12500
		Ultra-DE™ Double Tube, 4-Pin Base for Electronic Ballasts – Dimmable (4)										
13	3000159	CF13DE/827	G24q-1	91	0.175	900	810	2700	131	5.2	10000	12500
13	3000246	CF13DE/835	G24q-1	91	0.175	900	810	3500	131	5.2	10000	12500
13	3000160	CF13DE/841	G24q-1	91	0.175	900	810	4100	131	5.2	10000	12500
13	3000235	CF13DE/865	G24q-1	91	0.175	860	770	6500	131	5.2	10000	12500
18	3000056	CF18DE/827	G24q-2	100	0.220	1200	1080	2700	146	5.8	10000	12500
18	3000143	CF18DE/835	G24q-2	100	0.220	1200	1080	3500	146	5.8	10000	12500
18	3000136	CF18DE/841	G24q-2	100	0.220	1200	1080	4100	146	5.8	10000	12500
26	3000059	CF26DE/827	G24q-3	105	0.325	1800	1620	2700	165	6.6	10000	12500
26	3000144	CF26DE/835	G24q-3	105	0.325	1800	1620	3500	165	6.6	10000	12500
26	3000137	CF26DE/841	G24q-3	105	0.325	1800	1620	4100	165	6.6	10000	12500
26	3000238	CF26DE/865	G24q-3	105	0.325	1710	1540	6500	165	6.6	10000	12500

* Based on ANSI / IESNA standards of 3 hours per start
** Based on estimated commercial operating standards of 12 hours per start

All dimensions shown in inches unless otherwise noted.

When using dimmers, dimming systems, or occupancy sensors, the lamp life will also be affected.
The dimming system manufacturer can advise the affect of their system on lamp life.

Hg contains mercury
contient du mercure

Manage in Accord with Disposal Laws
www.lamprecycle.org 1-800-895-8842

USHIO

COMPACT FLUORESCENT TRIPLE TUBE

Triple Tube Compact Fluorescent Lamps

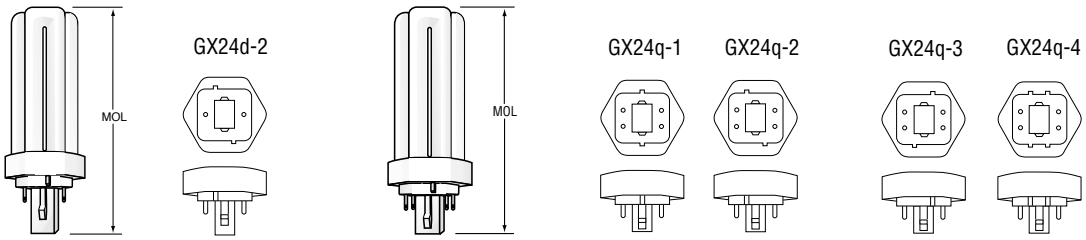

(5) 2-Pin Base (6) 4-Pin Base

Case Quantity: 50

Watts (W)	Ordering Code	Lamp Description	Base	Volts (V)	Lamp Current (A)	Luminous Flux Nom. (lm)	Luminous Flux Min. (lm)	Color Temp (K)	Dimensions MOL (mm)	Dimensions MOL (in)	Avg* Rated Life (h)	Commercial Life** (h)
		Ultra-T™ Triple Tube, 2-Pin Base (5)										
26	3000203	CF26T/827	GX24d-3	105	0.325	1800	1620	2700	138	5.4	10000	12500
		Ultra-TE™ Triple Tube, 4-Pin Base for Electronic Ballasts (6) – Dimmable										
13	3000207	CF13TE/827	GX24q-1	91	0.175	900	810	2700	108	4.4	10000	12500
13	3000209	CF13TE/835	GX24q-1	91	0.175	900	810	3500	108	4.4	10000	12500
13	3000208	CF13TE/841	GX24q-1	91	0.175	900	810	4100	108	4.4	10000	12500
18	3000211	CF18TE/827	GX24q-2	100	0.220	1200	1080	2700	116	4.6	10000	12500
18	3000255	CF18TE/830	GX24q-2	100	0.220	1200	1080	3000	116	4.6	10000	12500
18	3000213	CF18TE/835	GX24q-2	100	0.220	1200	1080	3500	116	4.6	10000	12500
18	3000212	CF18TE/841	GX24q-2	100	0.220	1200	1080	4100	116	4.6	10000	12500
26	3000215	CF26TE/827	GX24q-3	105	0.325	1800	1620	2700	131	5.2	10000	12500
26	3000254	CF26TE/830	GX24q-3	105	0.325	1800	1620	3000	131	5.2	10000	12500
26	3000217	CF26TE/835	GX24q-3	105	0.325	1800	1620	3500	131	5.2	10000	12500
26	3000216	CF26TE/841	GX24q-3	105	0.325	1800	1620	4100	131	5.2	10000	12500
26	3000218	CF26TE/865	GX24q-3	105	0.325	1710	1540	6500	131	5.2	10000	12500
32	3000219	CF32TE/827	GX24q-3	100	0.320	2400	2160	2700	147	5.8	10000	12500
32	3000252	CF32TE/830	GX24q-3	100	0.320	2400	2160	3000	147	5.8	10000	12500
32	3000221	CF32TE/835	GX24q-3	100	0.320	2400	2160	3500	147	5.8	10000	12500
32	3000220	CF32TE/841	GX24q-3	100	0.320	2400	2160	4100	147	5.8	10000	12500
32	3000222	CF32TE/865	GX24q-3	100	0.320	2280	2052	6500	147	5.8	10000	12500
42	3000223	CF42TE/827	GX24q-4	135	0.320	3200	2880	2700	168	6.7	10000	12500
42	3000253	CF42TE/830	GX24q-4	135	0.320	3200	2880	3000	168	6.7	10000	12500
42	3000225	CF42TE/835	GX24q-4	135	0.320	3200	2880	3500	168	6.7	10000	12500
42	3000224	CF42TE/841	GX24q-4	135	0.320	3200	2880	4100	168	6.7	10000	12500
42	3000226	CF42TE/865	GX24q-4	135	0.320	3040	2740	6500	168	6.7	10000	12500

All dimensions shown in inches unless otherwise noted.

* Based on ANSI / IESNA standards of 3 hours per start
** Based on estimated commercial operating standards of 12 hours per start

When using dimmers, dimming systems, or occupancy sensors, the lamp life will also be affected.
The dimming system manufacturer can advise the affect of their system on lamp life.

Hg contains mercury
contient du mercure

Manage in Accord with Disposal Laws
www.lamprecycle.org 1-800-895-8842

USHIO

Form No. S-CFL/0817
Specifications may be subject to change without prior notice. Refer to www.ushio.com for the most current product specifications.