PHILIPS

Installation Guide

Mains T8

The guide contains important information and notes regarding the installation and operation of Philips Professional Ballast Bypass LED T8

Please note the important points below

- Philips Professional Ballast Bypass LED T8 are suitable to replace either T8 or T12 fluorescent lamps in fixtures containing G13 lampholders.

- Product is not dimmable
- Modifications to the product void the wattanty
- Operates on mains application only
- Not for emergency lighting
- Operate with metal fixture only

RoHS COMPLIANT

Philips Professional Ballast Bypass LED T8

Ensure all parts and accessories are in the package, including instructions, field-applied label and tubular LED lamp. Please ensure to turn off the power supply from the main circuit breaker first.

Retrofit Instructions

1. Remove diffuser (if applicable) and fluorescent lamps.
2. Open\Remove Wiring Compartment Cover.
3. Cut off all wires which connected to ballast.
4. Short two pins of each side lampholder, via electrically wiring.
5. Connect one wire of the lampholder to AC main supply line hot wire(L), and the other wire from the other side lampholder to AC main supply neutral wire(N).

   Note: All wire connections must be properly capped to avoid shorting to luminaire enclosure and to avoid shock hazard. Unused Wires should also be capped/taped.
6. Close up wiring compartment.
7. Connect end of the LED tube to the lampholder in luminaire that is wired electrically in step 5 above. Make sure to connect L, N as marked on lamp cap.
8. Place the diffuser, if originally provided. Put warning stick on luminaire;
9. Switch on the power.
10. Repeat steps 3 to step 9 for each additional LED tube, up to six tubes maximum in a luminaire.

Luminare Description

- Philips LED T8 tubes are suitable for installation in luminaires employing T8 or T12 types lamps.
- Philips LED T8 tubes can't retrofit original luminaries which use remote Starter.
- Philips LED T8 tubes are intended to retrofit maximum four lamps, UL Listed surface mount, or type IC or non-IC recessed mount fluorescent luminaries with diffuser or without diffuser that use straight tubular lamps.
- These products intended to be used in dry or damp locations only.
- Please make sure the existed luminaire dimension is larger than dimension described in below table.

Philips LED T8 tube intended to retrofit Max. Number tubes in original luminaire	Luminaire Dimension with Max. No. of tubes Length X Width X Height (cm)
Max. 6pcs LED tubes(48") can be operated in a luminaire with or without diffuser	122 × 49 × 4
Max. 4pcs LED tubes(24") can be operated in a luminaire with or without diffuser	62 × 56 × 5

Figure A – Retrofit Luminaire with One Lamp

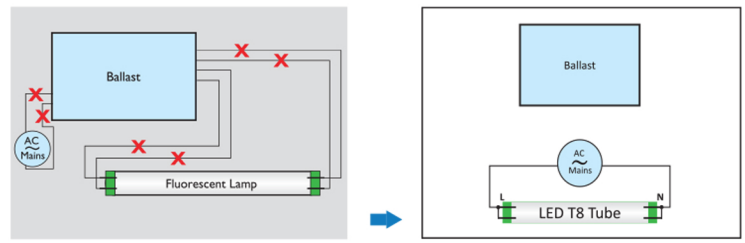

Figure B – Retrofit Luminaire with Two Lamps and one ballast

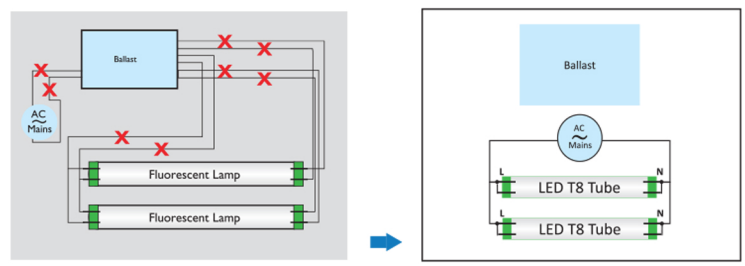

Figure C – Retrofit Luminaire with Three/Four Lamps and one ballast

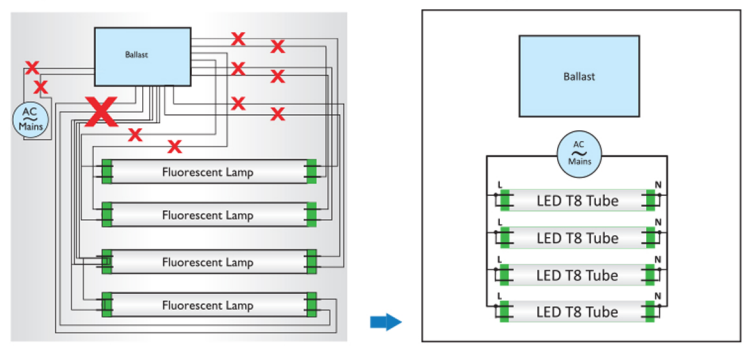

Figure D – Retrofit Luminaire with six lamps and two ballasts (one 2-lamps and one 4-lamps).
Other configrations such as two 3-lamps Ballast or three 2-lamps Ballast can be wired in similar fashion.

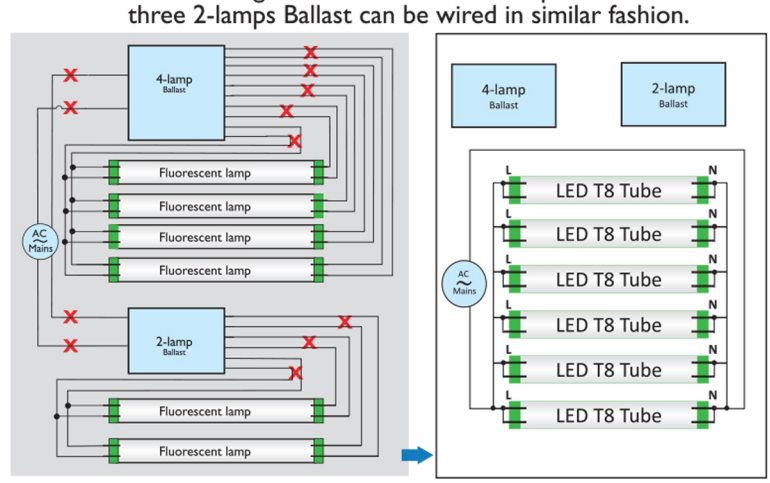

Lampholders

Rapid Start Lampholders

Non-Shunted

Instant Start Lampholders

Shunted

Philips Professional Ballast Bypass LED T8

WARNINGS, CAUTIONS AND OPERATING INSTRUCTIONS

WARNING: "THIS PRODUCT MUST BE INSTALLED IN ACCORDANCE WITH THE APPLICABLE INSTALLATION CODE BY A PERSON FAMILIAR WITH THE CONSTRUCTION AND OPERATION OF THE PRODUCT AND THE HAZA RDS INVOLVED."

1. Risk of fire or electric shock. The electrical rating of these products are 120~277V, the installer must determine whether they have 120~277V at the luminaire before installation.
2. Risk of fire or electric shock. Luminaires wiring, ballasts, or other electrical parts may be damaged when installing of reflector kit hardware. Check for enclosed wiring and components.
3. Risk of fire or electric shock. LED Retrofit kit installation requires knowledge of fluorescent lighting luminaires electrical systems. If not qualified, do not attempt installation. Contact a qualified electrician.
4. Risk of fire or electric shock. Install this kit only in the luminaires that has the construction features and dimensions shown in the photographs and/or drawings.
5. To prevent wiring damage or abrasion, do not expose wiring to edges of sheet metal or other sharp objects.
6. Do not make or alter any open holes in an enclosure of wiring or electrical components during kit installation.
7. Installers should not disconnect existing wires from lampholder terminals to make new connections at lampholder terminals Instead installers should cut existing lampholder leads away from the lampholder and make new electrical connections to lampholder lead wires by employing applicable connectors.

SUITABLE FOR DRY OR DAMP LOCATIONS.
DO NOT USE WITH DIMMERS
THIS DEVICE IS NOT INTENDED FOR USE WITH EMERGENCY EXITS.
THIS DEVICE COMPLIES WITH PART15 OF THE FCC RULES. OPERATION IS SUBJECT TO THE FOLLOWING TWO CONDITIONS:
(1) THIS DEVICE MAY NOT CAUSE HARMFUL INTERFERENCE
(2) THIS DEVICE MUST ACCEPT ANY INTERFERENCE RECEIVED, INCLUDING INTERFERENCE THAT MAY CAUSE UNDESIRED OPERATION.
This Class B digital apparatus complies with Canadian ICES-005

© Philips Lighting Holding B.V. 2017
Philips reserves the right to make changes in specifications and/or to discontinue any product at any time without notice or obligation and will not be liable for any consequences resulting from the use of this publication.

05/27 philips.com

Philips Lighting North America Corporation
200 Franklin Square Drive
Somerset, NJ 08873, USA
Tel. 855-486-2216

Imported by: Philips Lighting Canada Ltd.
281 Hillmount Road,
Markham, ON, Canada L6C 2S3
Tel. 800-668-9008

3241 651 59342