T-6
SPECIAL SERVICE LAMPS

LONG LIFE

EMERGENCY EXIT SIGN USE

EXIT

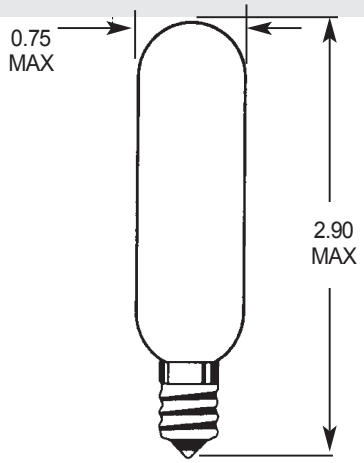

LINE NO.	VOLTS	AMPS	WATTS	LIFE @ 120 VOLTS	FILAMENT	CANDELABRA SCREW BASE
1	130.0	0.06	7	10,000	C-5A	**7T6-130V-CS**
2	130.0	0.12	15	5,000	C-7A	**15T6-130V-CS**
3	130.0	0.19	25	3,500	C-7A	**25T6-130V-CS**
4	145.0	0.10	15	10,000	C-7A	**15T6-145V-CS**

T-6½
SPECIAL SERVICE LAMPS

EMERGENCY EXIT SIGN USE

LONG LIFE

EXIT

THIS SECTION IS AVAILABLE IN 30,000 HOUR LONG LIFE VERSION.

C-8 LINEAR FILAMENT ON ALL T-6-1/2 LAMPS
AVAILABLE IN CLEAR OR FROSTED (F) OR (TF) TUFF-COATED.

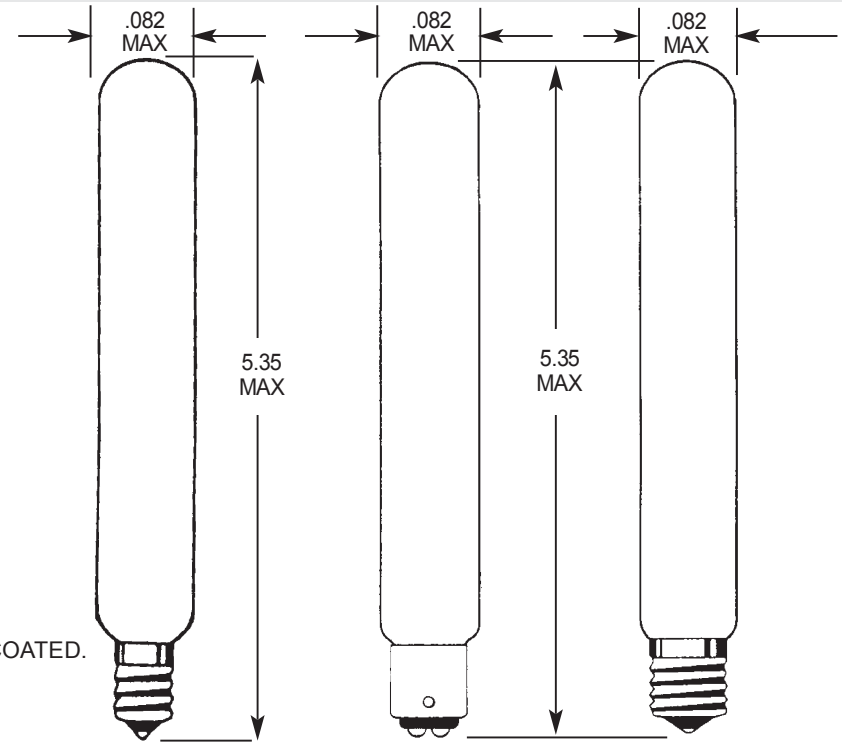

LINE NO.	VOLTS	AMPS	WATTS	LIFE @ 120 VOLTS	FILAMENT	CANDELABRA SCREW BASE	DOUBLE CONTACT BAYONET BASE	INTERMEDIATE SCREW BASE
5	130.0	0.16	20	4,000	C-8	—	**20T6.5-130V-DC**	**20T6.5N-130V-INT**
6	130.0	0.16	20	4,000	C-8	—	**20T6.5-130V-DCF**	**20T6.5N-130V-IF**
7								
8	130.0	0.20	25	4,000	C-8	**25T6.5-130V-CS**	**25T6.5-130V-DC**	**25T6.5N-130V-INT**
9	130.0	0.20	25	4,000	C-8	—	**25T6.5-130V-DCF**	**25T6.5N-130V-IF**
10								
11	130.0	0.307	40	3,500	C-8	—	**40T6.5-130V-DC**	**40T6.5N-130V-INT**
12	220.0	0.114	25	3,500	C-8	—	—	**25T6.5N-220V-INT**