PAR30/LED

12PAR30S/EC/F40/940/DIM/120V 6/1

Philips PAR30 and PAR20 LED Single Optic Lamps provide superior lighting aesthetics and optimal thermal efficiency in a sleek, lightweight design.

Product data

General Information	
Cap-Base	E26 [Single Contact Medium Screw]
Nominal Lifetime (Nom)	40000 h
Switching Cycle	50000X
Technical Type	12-75W

Light Technical	
Color Code	940 [CCT of 4000K]
Beam Angle (Nom)	40 °
Initial lumen (Nom)	950 lm
Luminous Flux (Rated) (Nom)	950 lm
Luminous Intensity (Nom)	2100 cd
Color Designation	Cool White (CW)
Rated Beam Angle	40 °
Correlated Color Temperature (Nom)	4000 K
Luminous Efficacy (rated) (Nom)	75.00 lm/W
Color Consistency	<6
Color Rendering Index (Nom)	95
LLMF At End Of Nominal Lifetime (Nom)	70 %

Operating and Electrical	
Input Frequency	60 Hz
Power (Rated) (Nom)	12 W
Lamp Current (Nom)	120 mA
Wattage Equivalent	75 W
Starting Time (Nom)	0.5 s
Warm Up Time To 60% Light (Nom)	0.5 s
Power Factor (Nom)	0.9
Voltage (Nom)	120 V

Temperature	
T-Case Maximum (Nom)	90 °C

Controls and Dimming	
Dimmable	Yes

Approval and Application	
Suitable For Accent Lighting	Yes

Product Data	
Order product name	12PAR30S/EXPERTCOLOR/F40/940/DIM
EAN/UPC - Product	046677470944
Order code	470948
Numerator - Quantity Per Pack	1
Numerator - Packs per outer box	6
Material Nr. (12NC)	929001340804
Net Weight (Piece)	0.220 kg

Warnings and Safety

- Suitable for use in damp locations.
- Not for use in totally enclosed luminaires.
- Before replacing, turn off power and let lamp cool to avoid electrical shock or burn.
- CAUTION: Risk of electric shock— do not use where directly exposed to water
- NOTES: This device complies with Part 18 of the FCC rule. This product may cause interference with other devices. If interference occurs,change the location of the products involved. This RFLD device complies with Canadian ICES-005.

Dimensional drawing

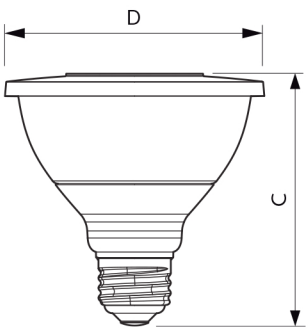

PAR30S 12-90W 950lm 40D 4000K E26 D

Product	D	C
12PAR30S/EXPERTCOLOR/F40/940/DIM	94.2 mm	91.8 mm

Photometric data

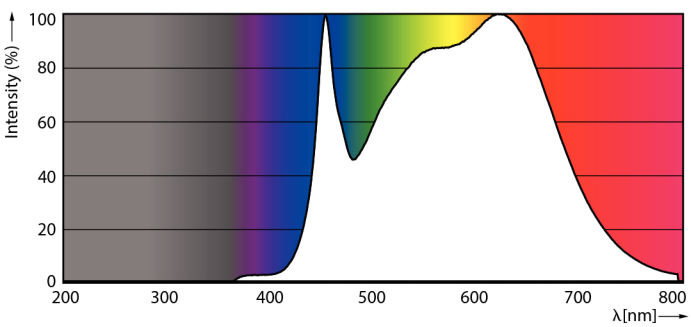

PAR38 17-120W 1250lm 25D 4000K E26 D

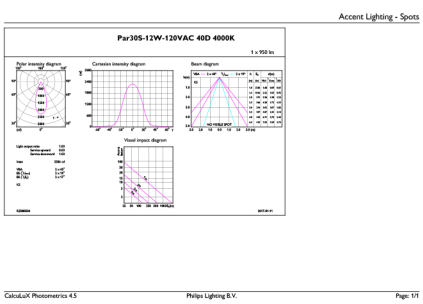

© 2017 Philips Lighting Holding B.V. All rights reserved. Philips Lighting reserves the right to make changes in specifications and/or to discontinue any product at any timewithout notice or obligation and will not be liable for any consequences resulting from the use of this publication.