PAR30/PAR20 LED

12PAR30S/EC/F25/927/DIM/120V 6/1

Philips PAR30 and PAR20 LED Single Optic Lamps provide superior lighting aesthetics and optimal thermal efficiency in a sleek, lightweight design.

Product data

General Information	
Cap-Base	E26 [Single Contact Medium Screw]
Nominal Lifetime (Nom)	40000 h
Switching Cycle	50000X
Technical Type	12-75W

Light Technical	
Color Code	927
Beam Angle (Nom)	25 °
Initial lumen (Nom)	850 lm
Luminous Flux (Rated) (Nom)	850 lm
Luminous Intensity (Nom)	4200 cd
Color Designation	Warm White (WW)
Rated Beam Angle	25 °
Correlated Color Temperature (Nom)	2700 K
Luminous Efficacy (rated) (Nom)	66.67 lm/W
Color Consistency	<6
Color Rendering Index (Nom)	95
LLMF At End Of Nominal Lifetime (Nom)	70 %

Operating and Electrical	
Input Frequency	60 Hz
Power (Rated) (Nom)	12 W
Lamp Current (Nom)	120 mA
Wattage Equivalent	75 W
Starting Time (Nom)	0.5 s
Warm Up Time To 60% Light (Nom)	0.5 s
Power Factor (Nom)	0.9
Voltage (Nom)	120 V

Temperature	
T-Case Maximum (Nom)	90 °C

Controls and Dimming	
Dimmable	Yes

Approval and Application	
Suitable For Accent Lighting	Yes

Product Data	
Order product name	12PAR30S/EXPERTCOLOR/F25/927/DIM
EAN/UPC - Product	046677470906
Order code	470906
Numerator - Quantity Per Pack	1
Numerator - Packs per outer box	6
Material Nr. (12NC)	929001340304
Net Weight (Piece)	0.220 kg

Warnings and Safety

- Suitable for use in damp locations.
- Not for use in totally enclosed luminaires.
- Before replacing, turn off power and let lamp cool to avoid electrical shock or burn.
- CAUTION: Risk of electric shock— do not use where directly exposed to water
- NOTES: This device complies with Part 18 of the FCC rule. This product may cause interference with other devices. If interference occurs,change the location of the products involved. This RFLD device complies with Canadian ICES-005.

Dimensional drawing

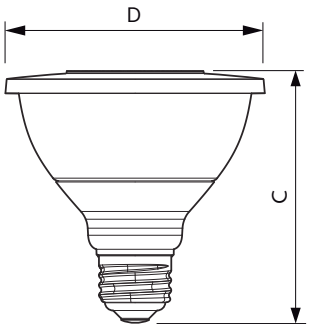

PAR30S 120V 12-90W 850lm 25D 2700K E26 D

Product	D	C
12PAR30S/EXPERTCOLOR/F25/927/DIM	94.8 mm	93.1 mm

Photometric data

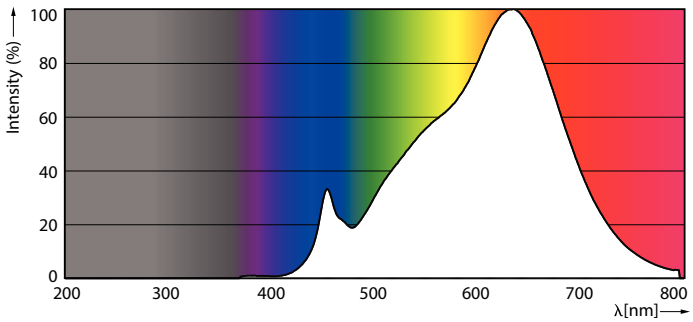

PAR38 120V 17-90W 1150lm 8D 2700K E26 D

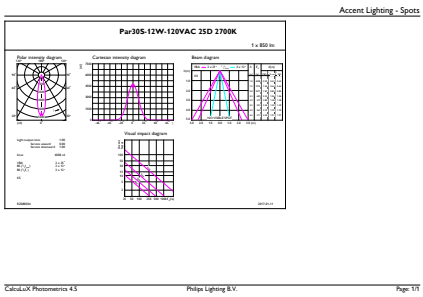

© 2017 Philips Lighting Holding B.V. All rights reserved. Philips Lighting reserves the right to make changes in specifications and/or to discontinue any product at any timewithout notice or obligation and will not be liable for any consequences resulting from the use of this publication.