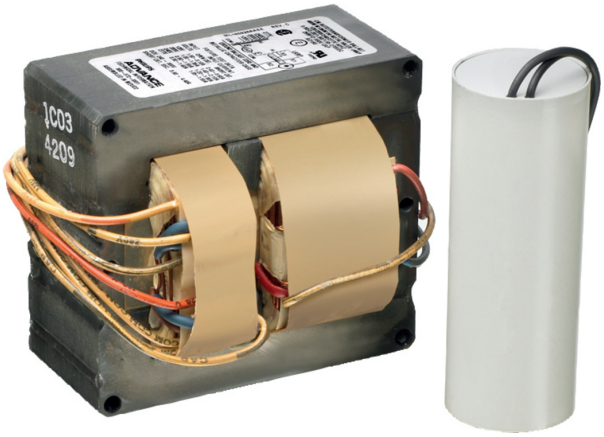

Core & Coil (71A) MH 175W - 450W

CORE & COIL HID MH BAL 175W M137/M152 QUAD KIT

The basic ballast is the open core and coil which is most often used as a component within a lighting luminaire. The core and coil also forms the nucleus of Philips Advance's five other ballast configurations.

Product data

- General Information

ANSI Code	M137/M152
Lamp Type	175W MH
Number of Lamps	1 piece/unit
Circuit Type	SUPER-CWA
Ballast Type	Magnetic HID
Base Model	71A5593
Core Size	3 X 4 (2 coil)
Suitable For Outdoor Use	Yes
Ignitor Catalog Number	LI533-H4
Ignitor Temperature Rating	105°C
Capacitor Value	11 MFD
Capacitor Catalog Number	7C110M40
Capacitor Require-ments	370V
Capacitor Tempera-ture Rating	105°C
Capacitor Diameter/ Oval Dimensions	1.65 in
Capacitor Height	3.75 in
Automatic Restart	No

- Operating and Electrical

Input Voltage	120/208/240/277 V
Input Frequency	60 Hz
Inp. Current (Open Circuit)	1.9/1.05/0.9/0.8 A
Input Current (Starting)	0.7/0.75/0.65/0.55 A
Input Current (Short Circuit)	0.4-0.7/0.22-0.35/0.2-0.35/0.17-0.32 A
Secondary Short Circuit Current	1.6-1.95 A
Constant Wattage Deviation	10%
Ballast Factor (Nom)	1
Power Factor (Nom)	0.90
Nominal Open Circuit Voltage	275 V
Input Current (Oper-ating) (Nom)	1.8/1.05/0.9/0.8 A A
Input Power (Nom)	208 W
Rated Lamp Watts	175W W

- Wiring

Wire Striplength	0.5 mm
Wire Length By Color	12"
Wire Type	Stranded
Remote Wiring Configuration Allowed	Yes
Max Ballast-Lamp Distance Remote Wiring	2'
Recommended Fuse Value	5/3/3/3 A

- Approval and Application

Open Circuit Voltage Test (Volts)	250-300 V
Approbation Marks	ULR CSA certificate RoHS Compliant
Temperature Marking	C/C/C/C

PHILIPS

Core & Coil (71A) MH 175W - 450W

UL Recognized	Yes
Hipot Test (1 Minute)	2000 V
Hipot Test (2 Seconds)	2500 V
UL Insulation Class	H(180°C)
UL Temperature Code	1029C

EAN/UPC - Product	781087120798
Order code	71A5593001D
Numerator - Quantity Per Pack	1
Numerator - Packs per outer box	1
Material Nr. (12NC)	913700503051
Net Weight (Piece)	3.634 kg

- Product Data

Order product name	CORE & COIL HID 71A5593001D

Dimensional drawing

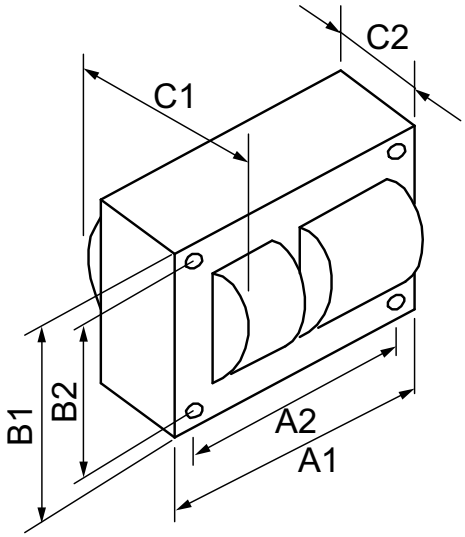

MH BAL 175W M137/M152 QUAD KIT

Product	C1	C2	A1	A2	B1	B2
CORE & COIL HID 71A5593001D	3.5 in	2.24 in	3.9 in	3.5 in	2.8 in	2.4 in

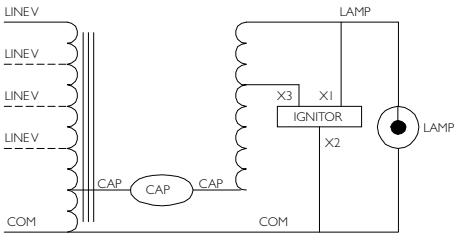

© 2016 Philips Lighting Holding B.V.
All rights reserved.

Specifications are subject to change without notice. Trademarks are the property of Koninklijke Philips N.V. (Royal Philips) or their respective owners.

www.philips.com/lighting

2016, February 1
data subject to change