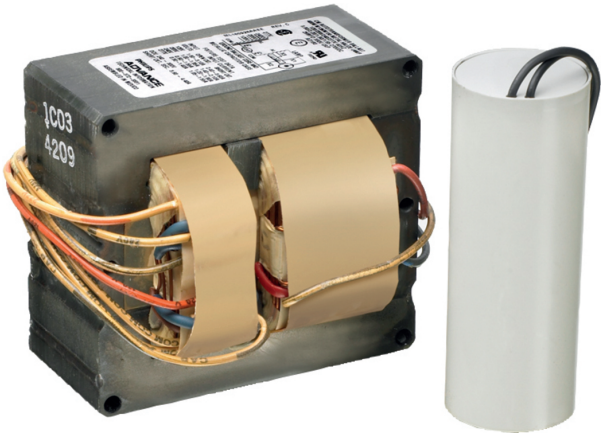

Core & Coil (71A) MH ~GT~ 450W

CORE & COIL HID MH BAL 1500W M48 480V C&C

The basic ballast is the open core and coil which is most often used as a component within a lighting luminaire. The core and coil also forms the nucleus of Philips Advance's five other ballast configurations.

Product data

• General Information

ANSI Code	M48
Lamp Type	1500W MH
Number of Lamps	1 piece/unit
Circuit Type	CWA
Ballast Type	Magnetic HID
Base Model	71A6742
Core Size	4 1/4 x 6
Suitable For Outdoor Use	Yes
Ignitor Catalog Number	NA
Ignitor Temperature Rating	NA
Capacitor Value	32 MFD
Capacitor Catalog Number	MD3202100
Capacitor Require-ments	525V
Capacitor Tempera-ture Rating	90°C
Capacitor Diameter/ Oval Dimensions	2 in
Capacitor Height	3.75 in
Automatic Restart	No

• Operating and Electrical

Input Voltage	480 V
Input Frequency	60 Hz
Inp. Current (Open Circuit)	1.4 A
Input Current (Starting)	3.3 A
Input Current (Short Circuit)	2.4-3.7 V
Secondary Short Circuit Current	7.4-9 A
Constant Wattage Deviation	12%
Ballast Factor (Nom)	1
Power Factor (Nom)	0.90
Nominal Open Circuit Voltage	450 V
Input Current (Oper-ating) (Nom)	3.4 A A
Input Power (Nom)	1625 W
Rated Lamp Watts	1500W W

• Wiring

Wire Striplength	0.5 mm
Wire Length By Color	12"
Wire Type	Stranded
Remote Wiring Configuration Allowed	Yes
Max Ballast-Lamp Distance Remote Wiring	Determined by AWG used
Recommended Fuse Value	10 A

• Approval and Application

Open Circuit Voltage Test (Volts)	405-495 V
Approbation Marks	ULR CSA certificate RoHS Compliant
Temperature Marking	E

PHILIPS

Core & Coil (71A) MH ~GT~ 450W

UL Recognized	Yes
Hipot Test (1 Minute)	2000 V
Hipot Test (2 Seconds)	2500 V
UL Insulation Class	H(180°C)
UL Temperature Code	1029E

EAN/UPC - Product	781087023020
Order code	71A6742610
Numerator - Quantity Per Pack	1
Numerator - Packs per outer box	2
Material Nr. (12NC)	913700504341
Net Weight (Piece)	13.817 kg

- Product Data

Order product name	CORE & COIL HID 71A6742610

Dimensional drawing

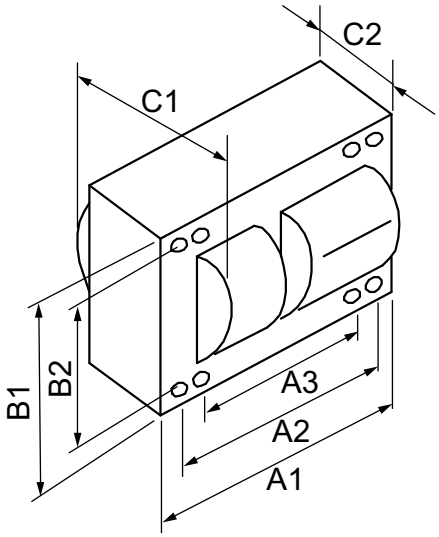

MH BAL 1500W M48 480V C&C

Product	C1	C2	A1	A2	A3	B1	B2
CORE & COIL HID 71A6742610	6.2 in	4.2 in	6 in	5.4 in	4.4 in	4.3 in	3.9 in

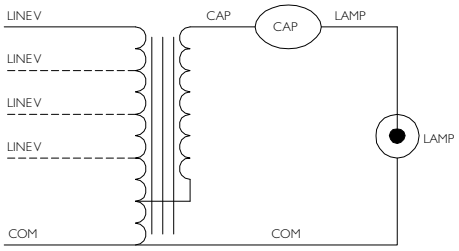

© 2016 Philips Lighting Holding B.V.
All rights reserved.

Specifications are subject to change without notice. Trademarks are the property of Koninklijke Philips N.V. (Royal Philips) or their respective owners.

www.philips.com/lighting