PHILIPS ADVANCE	Metal Halide Lamp Ballast	Catalog Number 71A6742 For 1500W M48 60 Hz CWA Status: Active

DIMENSIONS AND DATA

4 1/4 X 6 CORE - 2 COIL UNIT

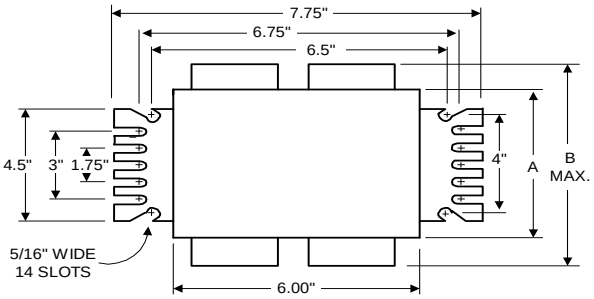

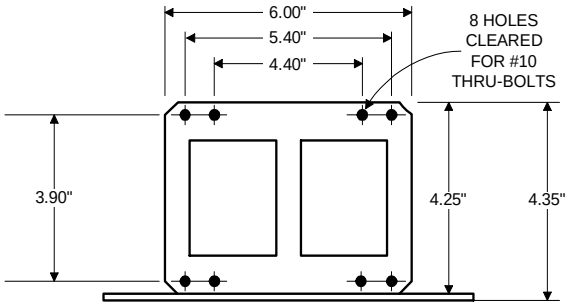

INPUT VOLTS		480				
CIRCUIT TYPE	CWA					
POWER FACTOR (min)	90%					
REGULATION						
Line Volts	±10%					
Lamp Watts	±12%					
LINE CURRENT (Amps)						
Operating		3.40				
Open Circuit		1.40				
Starting		3.30				
UL TEMPERATURE RATINGS						
Insulation Class	H(180℃)					
Coil Temperature Code	1029	E				
MIN. AMBIENT STARTING TEMP.	-20℉ or -30℃					
NOM. OPEN CIRCUIT VOLTAGE	450					
INPUT VOLTAGE AT LAMP DROPOUT		320				
INPUT WATTS	1625					
RECOMMENDED FUSE (Amps)		10				
CORE and COIL						
Dimension (A)	4.20					
Dimension (B)	6.20					
Weight (lbs.)	31					
Lead Lengths	12"					
CAPACITOR REQUIREMENT						
Microfarads	32.0					
Volts (min.)	525					
Fault Current Withstand (amps)						
60 Hz TEST PROCEDURES (Refer to Advance Test Procedure for HID Ballasts - Form 1270)						
High Potential Test (Volts)						
1 minute	2000					
2 seconds	2500					
Open Circuit Voltage Test (Volts)	405-495					
Short-Circuit Current Test (Amps)						
Secondary Current	7.40-9.00					
Input Current		2.40-3.70	-	-	-	-

Capacitor: MD3202-100

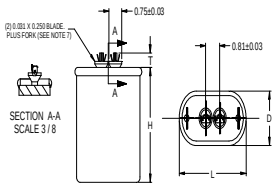

Capacitance:	32
Dia/Oval Dim:	2.00
Height:	3.75
Temp Rating:	90℃

Ignitor: NA

This ballast does not require the use of an ignitor.

Wiring Diagram:

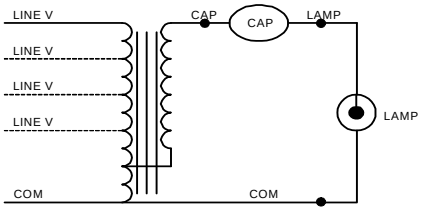

Fig. A

Ordering Information

Order Suffix	Description

Data is based upon tests performed by Philips Lighting Electronic N.A. in a controlled environment and representitive of relative performance. Actual performance can vary depending on operating conditions. Specifications are subject to change without notice.

Philips Lighting Electronic N.A.
10275 West Higgins Road · Rosemont, IL 60018 · Tel:800-322-2086 Fax:888-432-1882
Customer Support/ Technical Service:800-372-3331 · OEM Support: 866-915-5886

03/26/10