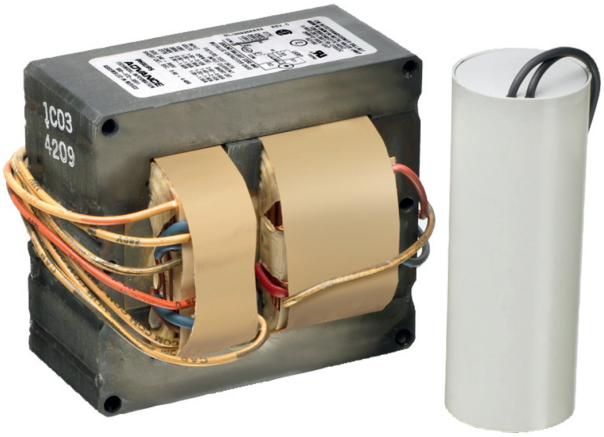

Core & Coil (71A) MH 175W - 450W

CORE & COIL HID MH BAL 400W M59 480V/120T KIT

The basic ballast is the open core and coil which is most often used as a component within a lighting luminaire. The core and coil also forms the nucleus of Philips Advance's five other ballast configurations.

Product data

• General Information

ANSI Code	M59
Lamp Type	400W MH
Number of Lamps	1 piece/unit
Circuit Type	CWA
Ballast Type	Magnetic HID
Base Model	71A6041TA
Core Size	4 1/4 x 4 3/4 (2 coil)
Suitable For Outdoor Use	Yes
Ignitor Catalog Number	NA
Ignitor Temperature Rating	NA
Capacitor Value	24 MFD
Capacitor Catalog Number	7C240P40R
Capacitor Require-ments	400V
Capacitor Tempera-ture Rating	105°C
Capacitor Diameter/ Oval Dimensions	1.75 in
Capacitor Height	4.8 in
Automatic Restart	No

• Operating and Electrical

Input Voltage	480/120T V
Input Frequency	60 Hz
Inp. Current (Open Circuit)	0.75 A
Input Current (Starting)	0.9 A
Input Current (Short Circuit)	0.6-0.95 A
Secondary Short Circuit Current	3.5-4.3 A
Constant Wattage Deviation	10%
Ballast Factor (Nom)	1
Power Factor (Nom)	0.90
Nominal Open Circuit Voltage	300 V
Input Current (Oper-ating) (Nom)	1 A A
Input Power (Nom)	462 W
Rated Lamp Watts	400W W

• Wiring

Wire Striplength	0.5 mm
Wire Length By Color	12"
Wire Type	Stranded
Remote Wiring Configuration Allowed	Yes
Max Ballast-Lamp Distance Remote Wiring	Determined by AWG used
Recommended Fuse Value	3 A

• Approval and Application

Open Circuit Voltage Test (Volts)	270-330 V
Approbation Marks	ULR CSA certificate RoHS Compliant
Temperature Marking	E

PHILIPS

Core & Coil (71A) MH 175W - 450W

UL Recognized	Yes
Hipot Test (1 Minute)	2000 V
Hipot Test (2 Seconds)	2500 V
UL Insulation Class	H(180°C)
UL Temperature Code	1029E

EAN/UPC - Product	781087096505
Order code	71A6041001D
Numerator - Quantity Per Pack	1
Numerator - Packs per outer box	1
Material Nr. (12NC)	913700535709
Net Weight (Piece)	5.729 kg

- Product Data

Order product name	CORE & COIL HID 71A6041001D

Dimensional drawing

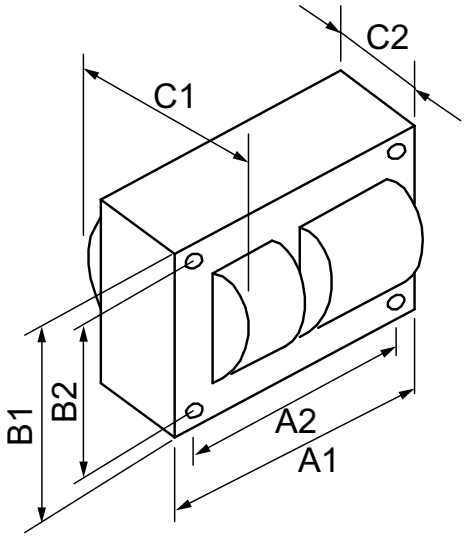

MH BAL 400W M59 480V/120T KIT

Product	C1	C2	A1	A2	B1	B2
CORE & COIL HID 71A6041001D	4 in	2.13 in	4.8 in	4.4 in	4.3 in	3.9 in

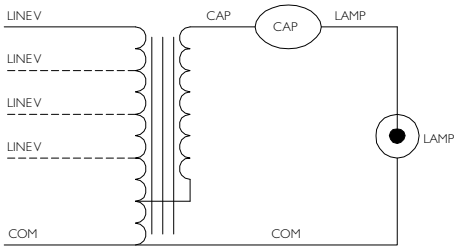

© 2016 Philips Lighting Holding B.V.
All rights reserved.

Specifications are subject to change without notice. Trademarks are the property of Koninklijke Philips N.V. (Royal Philips) or their respective owners.

www.philips.com/lighting

2016, February 1
data subject to change