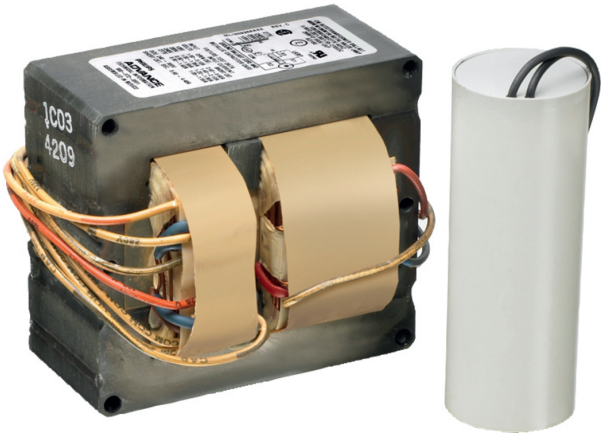

Core & Coil (71A) HPS 200W - 400W

CORE & COIL HID HPS BAL 200W S66 QUAD KIT

The basic ballast is the open core and coil which is most often used as a component within a lighting luminaire. The core and coil also forms the nucleus of Philips Advance's five other ballast configurations.

Product data

General Information

ANSI Code	S66
Lamp Type	200W HPS
Number of Lamps	1 piece/unit
Circuit Type	CWA
Ballast Type	Magnetic HID
Base Model	71A8970
Core Size	4 x 4 (2 coil)
Suitable For Outdoor Use	Yes
Ignitor Catalog Number	LI501-H4
Ignitor Temperature Rating	105°C
Capacitor Value	28 MFD
Capacitor Catalog Number	7C280P30RA
Capacitor Require-ments	280V
Capacitor Tempera-ture Rating	105°C
Capacitor Diameter/ Oval Dimensions	1.85 in
Capacitor Height	3.7 in
Automatic Restart	No

Operating and Electrical

Input Voltage	120/208/240/277 V
Input Frequency	60 Hz
Inp. Current (Open Circuit)	1.3/0.75/0.65/0.6 A
Input Current (Starting)	1.5/0.9/0.75/0.65 A
Input Current (Short Circuit)	1-1.6/0.6-0.95/0.5-0.8/0.45-0.7 A
Secondary Short Circuit Current	2.8-3.4 A
Constant Wattage Deviation	Within Trapezoid
Ballast Factor (Nom)	1
Power Factor (Nom)	0.90
Nominal Open Circuit Voltage	185 V
Input Current (Oper-ating) (Nom)	2.22/1.28/1.11/0.96 A A
Input Power (Nom)	240 W
Rated Lamp Watts	200W W

Wiring

Wire Striplength	0.5 mm
Wire Length By Color	12"
Wire Type	Stranded
Remote Wiring Configuration Allowed	Yes
Max Ballast-Lamp Distance Remote Wiring	2'
Recommended Fuse Value	6/4/3/3 A

Approval and Application

Open Circuit Voltage Test (Volts)	165-205 V
Approbation Marks	ULR CSA certificate RoHS Compliant
Temperature Marking	E/D/D/D

PHILIPS

Core & Coil (71A) HPS 200W - 400W

UL Recognized	Yes
Hipot Test (1 Minute)	2000 V
Hipot Test (2 Seconds)	2500 V
UL Insulation Class	H(180°C)
UL Temperature Code	1029E

EAN/UPC - Product	781087897010
Order code	71A8970001D
Numerator - Quantity Per Pack	1
Numerator - Packs per outer box	1
Material Nr. (12NC)	913700540509
Net Weight (Piece)	4.233 kg

- Product Data

Order product name	CORE & COIL HID 71A8970001D

Dimensional drawing

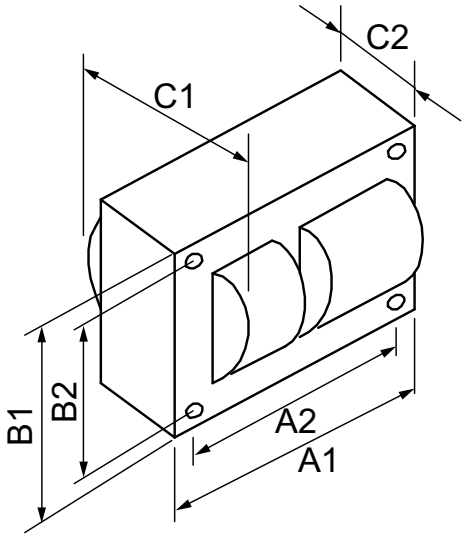

HPS BAL 200W S66 QUAD KIT

Product	C1	C2	A1	A2	B1	B2
CORE & COIL HID 71A8970001D	3 in	1.2 in	4.8 in	4.4 in	4.3 in	3.9 in

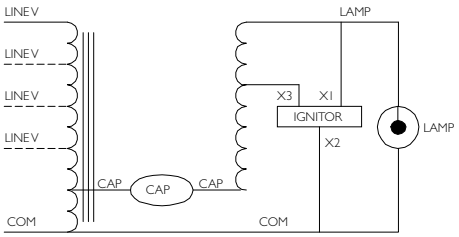

© 2016 Philips Lighting Holding B.V.
All rights reserved.

Specifications are subject to change without notice. Trademarks are the property of Koninklijke Philips N.V. (Royal Philips) or their respective owners.

www.philips.com/lighting

2016, February 1
data subject to change