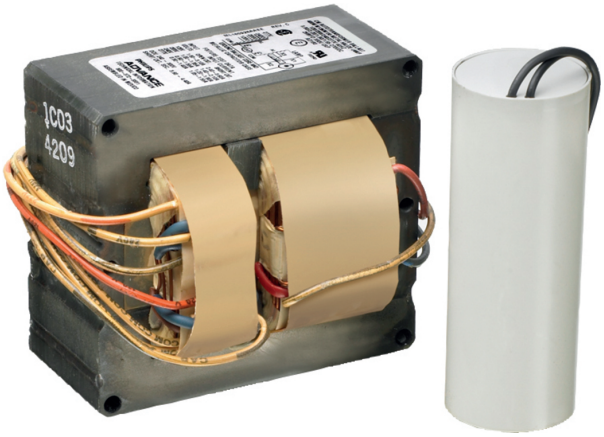

Core & Coil (71A) HPS ~LT~ 200W

CORE & COIL HID HPS BAL 150W S55 120V KIT

The basic ballast is the open core and coil which is most often used as a component within a lighting luminaire. The core and coil also forms the nucleus of Philips Advance's five other ballast configurations.

Product data

- General Information

ANSI Code	S55
Lamp Type	150W HPS
Number of Lamps	1 piece/unit
Circuit Type	R-HPF
Ballast Type	Magnetic HID
Base Model	71A8107B
Core Size	2 5/8 x 2 3/16
Suitable For Outdoor Use	Yes
Ignitor Catalog Number	INTEGRAL
Ignitor Temperature Rating	125°C
Capacitor Value	55 MFD
Capacitor Catalog Number	7C550P12RA
Capacitor Require-ments	120V
Capacitor Tempera-ture Rating	105°C
Capacitor Diameter/ Oval Dimensions	1.75 in
Capacitor Height	3.75 in
Automatic Restart	No

- Operating and Electrical

Input Voltage	120 V
Input Frequency	60 Hz
Inp. Current (Open Circuit)	2.35 A
Input Current (Starting)	2.25 A
Input Current (Short Circuit)	1.65-2.75 A
Secondary Short Circuit Current	3.65-5.55 A
Constant Wattage Deviation	Within Trapezoid
Ballast Factor (Nom)	1
Power Factor (Nom)	0.90
Nominal Open Circuit Voltage	120 V
Input Current (Oper-ating) (Nom)	1.5 A A
Input Power (Nom)	170 W
Rated Lamp Watts	150W W

- Wiring

Wire Striplength	0.5 mm
Wire Length By Color	12"
Wire Type	Stranded
Remote Wiring Configuration Allowed	Yes
Max Ballast-Lamp Distance Remote Wiring	2'
Recommended Fuse Value	15 A

- Approval and Application

Open Circuit Voltage Test (Volts)	114-126 V
Approbation Marks	ULR CSA certificate RoHS Compliant
Temperature Marking	A

PHILIPS

Core & Coil (71A) HPS ~LT~ 200W

UL Recognized	Yes
Hipot Test (1 Minute)	2000 V
Hipot Test (2 Seconds)	2500 V
UL Insulation Class	H(180°C)
UL Temperature Code	1029A

EAN/UPC - Product	781087026311
Order code	71A8107001DB
Local order code	132118
Numerator - Quantity Per Pack	1
Numerator - Packs per outer box	1
Material Nr. (12NC)	913700500911
Net Weight (Piece)	1.847 kg

- Product Data

Order product name	CORE & COIL HID 71A8107001DB

Dimensional drawing

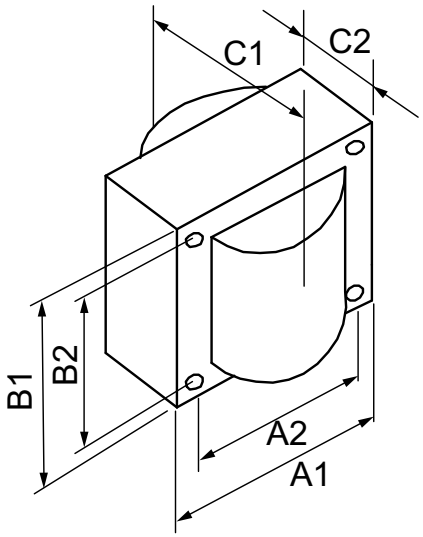

HPS BAL 150W S55 120V KIT

Product	C1	C2	A1	A2	B1	B2
CORE & COIL HID 71A8107001DB	3.6 in	2 in	2.6 in	2.2 in	2.2 in	1.8 in

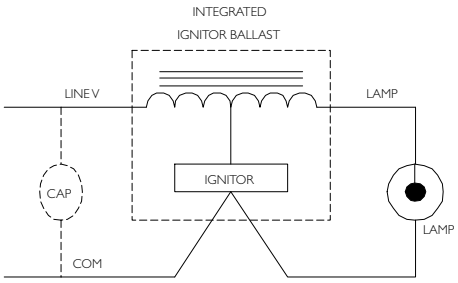

© 2015 Philips Lighting Holding B.V.
All rights reserved.

Specifications are subject to change without notice. Trademarks are the property of Koninklijke Philips N.V. (Royal Philips) or their respective owners.

www.philips.com/lighting

2015, November 29
data subject to change