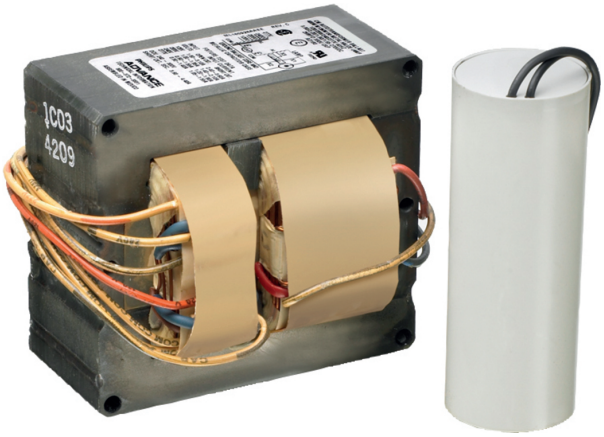

Core & Coil (71A) HPS ~LT~ 200W

CORE & COIL HID HPS BAL 50W S68 QUAD KIT

The basic ballast is the open core and coil which is most often used as a component within a lighting luminaire. The core and coil also forms the nucleus of Philips Advance's five other ballast configurations.

Product data

• General Information

ANSI Code	S68
Lamp Type	50W HPS
Number of Lamps	1 piece/unit
Circuit Type	HX-HPF
Ballast Type	Magnetic HID
Base Model	71A7891
Core Size	3 X 4 (2 coil)
Suitable For Outdoor Use	Yes
Ignitor Catalog Number	LI551-H4
Ignitor Temperature Rating	105°C
Capacitor Value	5 MFD
Capacitor Catalog Number	7C050L30RA
Capacitor Require-ments	300V
Capacitor Tempera-ture Rating	105°C
Capacitor Diameter/ Oval Dimensions	1.25 in
Capacitor Height	2.25 in
Automatic Restart	No

• Operating and Electrical

Input Voltage	120/208/240/277 V
Input Frequency	60 Hz
Inp. Current (Open Circuit)	1/0.57/0.5/0.45 A
Input Current (Starting)	0.65/0.37/0.32/0.3 A
Input Current (Short Circuit)	0.6-0.8/0.32-0.48/0.3-0.4/0.25-0.35 A
Secondary Short Circuit Current	1.3-1.9 A
Constant Wattage Deviation	Within Trapezoid
Ballast Factor (Nom)	1
Power Factor (Nom)	0.90
Nominal Open Circuit Voltage	125 V
Input Current (Oper-ating) (Nom)	0.61/0.35/0.31/0.26 A A
Input Power (Nom)	66 W
Rated Lamp Watts	50W W

• Wiring

Wire Striplength	0.5 mm
Wire Length By Color	12"
Wire Type	Stranded
Remote Wiring Configuration Allowed	Yes
Max Ballast-Lamp Distance Remote Wiring	2'
Recommended Fuse Value	3/2/2/1 A

• Approval and Application

Open Circuit Voltage Test (Volts)	115-135 V
Approbation Marks	ULR CSA certificate RoHS Compliant
Temperature Marking	A/A/A/A

PHILIPS

Core & Coil (71A) HPS ~LT~ 200W

UL Recognized	Yes
Hipot Test (1 Minute)	2000 V
Hipot Test (2 Seconds)	2500 V
UL Insulation Class	H(180°C)
UL Temperature Code	1029A

EAN/UPC - Product	781087087985
Order code	71A7891001D
Local order code	500769
Numerator - Quantity Per Pack	1
Numerator - Packs per outer box	1
Material Nr. (12NC)	913701115201
Net Weight (Piece)	1.937 kg

- Product Data

Order product name	CORE & COIL HID 71A7891001D

Dimensional drawing

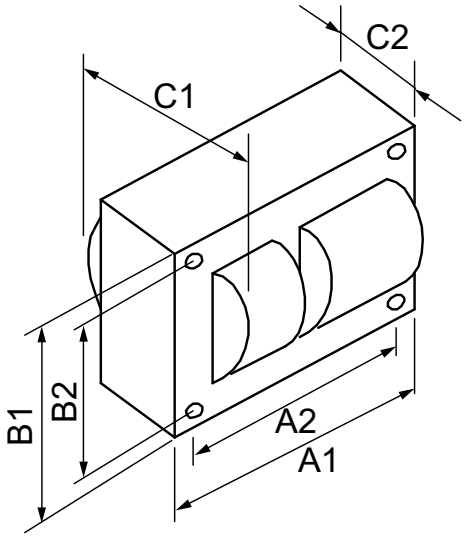

HPS BAL 50W S68 QUAD KIT

Product	C1	C2	A1	A2	B1	B2
CORE & COIL HID 71A7891001D	2.2 in	1 in	3.9 in	3.5 in	2.8 in	2.4 in

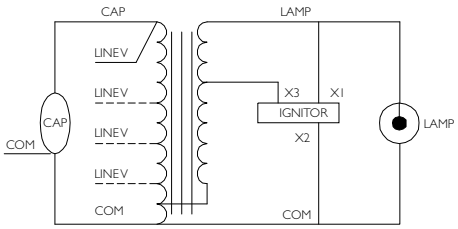

© 2015 Philips Lighting Holding B.V.
All rights reserved.

Specifications are subject to change without notice. Trademarks are the property of Koninklijke Philips N.V. (Royal Philips) or their respective owners.

www.philips.com/lighting

2015, November 29
data subject to change