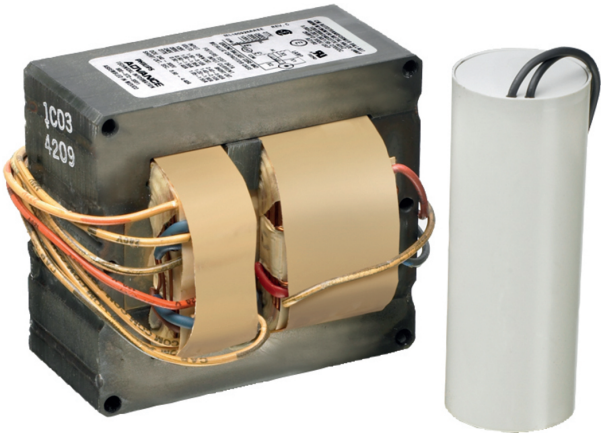

Core & Coil (71A) HPS ~GT~ 400W

CORE & COIL HID HPS BAL 1000W S52 480V KIT

The basic ballast is the open core and coil which is most often used as a component within a lighting luminaire. The core and coil also forms the nucleus of Philips Advance's five other ballast configurations.

Product data

General Information

ANSI Code	S52
Lamp Type	1000W HPS
Number of Lamps	1 piece/unit
Circuit Type	CWA
Ballast Type	Magnetic HID
Base Model	71A8743
Core Size	4 1/4 x 6
Suitable For Outdoor Use	Yes
Ignitor Catalog Number	LI571-H5
Ignitor Temperature Rating	105°C
Capacitor Value	26 MFD
Capacitor Catalog Number	RW1626020
Capacitor Require-ments	525V
Capacitor Tempera-ture Rating	90°C
Capacitor Diameter/ Oval Dimensions	1.75 in
Capacitor Height	4.25 in
Automatic Restart	No

Operating and Electrical

Input Voltage	480 V
Input Frequency	60 Hz
Inp. Current (Open Circuit)	0.9 A
Input Current (Starting)	1.6 A
Input Current (Short Circuit)	1.75-2.65 A
Secondary Short Circuit Current	6.4-7.8 A
Constant Wattage Deviation	Within Trapezoid
Ballast Factor (Nom)	1
Power Factor (Nom)	0.90
Nominal Open Circuit Voltage	435 V
Input Current (Oper-ating) (Nom)	2.3 A A
Input Power (Nom)	1100 W
Rated Lamp Watts	1000W W

Wiring

Wire Striplength	0.5 mm
Wire Length By Color	12"
Wire Type	Stranded
Remote Wiring Configuration Allowed	Yes
Max Ballast-Lamp Distance Remote Wiring	15'
Recommended Fuse Value	6 A

Approval and Application

Open Circuit Voltage Test (Volts)	395-485 V
Approbation Marks	ULR CSA certificate RoHS Compliant
Temperature Marking	C

PHILIPS

Core & Coil (71A) HPS ~GT~ 400W

UL Recognized	Yes
Hipot Test (1 Minute)	2000 V
Hipot Test (2 Seconds)	2500 V
UL Insulation Class	H(180°C)
UL Temperature Code	1029C

EAN/UPC - Product	781087874318
Order code	71A8743001
Local order code	193540
Numerator - Quantity Per Pack	1
Numerator - Packs per outer box	1
Material Nr. (12NC)	913700540109
Net Weight (Piece)	13.776 kg

- Product Data

Order product name	CORE & COIL HID 71A8743001

Dimensional drawing

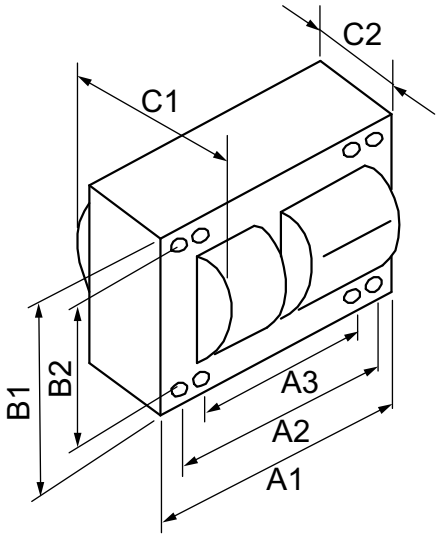

HPS BAL 1000W S52 480V KIT

Product	C1	C2	A1	A2	A3	B1	B2
CORE & COIL HID 71A8743001	5.90 in	3.90 in	6 in	5.4 in	4.4 in	4.3 in	3.9 in

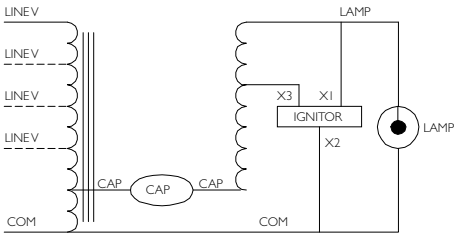

© 2015 Philips Lighting Holding B.V.
All rights reserved.

Specifications are subject to change without notice. Trademarks are the property of Koninklijke Philips N.V. (Royal Philips) or their respective owners.

www.philips.com/lighting

2015, December 24
data subject to change