e-Vision Low Wattage 20-150W

E-VISION ELE MH BAL 70W M139/M143 120-277 50/60HZ

Low frequency electronic HID ballasts such as the Philips Advance e-Vision line constantly measure and adjust the wattage, optimizing delivery of the ceramic lamps' superior color properties. This makes ceramic metal halide operated by e-Vision ballasts the premier choice for many applications previously illuminated by either tungsten halogen or incandescent sources, such as retail lighting.

Product data

General Information

ANSI Code	C98/M98, C139/M139, M143
Lamp Type	70W MH
Number of Lamps	1 piece/unit
Ballast Type	Electronic HID
Base Model	IMH70GBLS
Suitable For Outdoor Use	Yes

Operating and Electrical

Input Voltage	120 to 277 V
Input Frequency	50 to 60 Hz
Max THD	15 %
Lamp Current Crest Factor (Nom)	1.8
Ignition Time (Nom)	1200 s
Ballast Factor (Nom)	1
Power Factor (Nom)	0.90
Input Current (Operating) (Max)	0.66 A
Input Current (Operating) (Min)	0.28 A
Input Power (Nom)	79-76 W
Rated Lamp Watts	70 W

Wiring

Color Input Terminals	No terminals
Color Output Terminals	No terminals
Wire Striplength	0.50 mm
Control Wire Gauge	NA
Wire Length By Color	All leads = 11"
Wire Gauge (Nom)	18AWG mm
Wire Type	Stranded
Remote Wiring Configuration Allowed	Yes
Tandem Wiring Configuration Allowed	No
Through Wiring Configuration Allowed	No
Connector Type	No connector

Temperature

T-Case Maximum (Nom)	90 °C

Mechanical and Housing

Housing Material	Metal
Housing	G
Housing Dimensions	3.5" x 3.0" x 1.2"

Approval and Application

EMC Immunity Standard	FCC Non-Consumer
Approbation Marks	CSA certificate UL certificate NOM certificate RoHS Compliant
Sound Rating	A
UL Recognized	No

Product Data

Order product name	E-VISION IMH70GBLSM

PHILIPS

e-Vision Low Wattage 20-150W

EAN/UPC - Product	781087041871	Numerator - Packs per outer box	16
Order code	IMH70GBLSM	Material Nr. (12NC)	913710259702
Numerator - Quantity Per Pack	1	Net Weight (Piece)	0.413 kg

Dimensional drawing

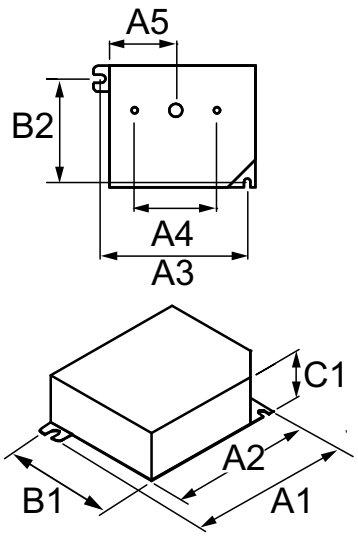

ELE MH BAL 70W M139/M143 120-277 50/60HZ

Product	A1	A2	A3	A4	A5	B1	B2	C1
E-VISION IMH70GBLSM	3.8 in	3.5 in	3.4 in	2.0 in	1.13 in	3.0 in	2.6 in	1.2 in

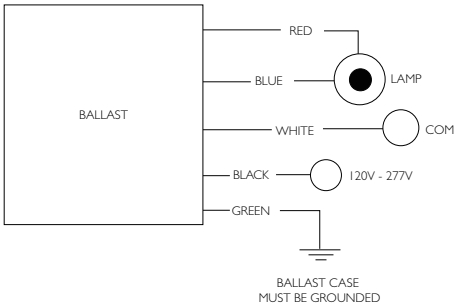

© 2016 Philips Lighting Holding B.V.
All rights reserved.

Specifications are subject to change without notice. Trademarks are the property of Koninklijke Philips N.V. (Royal Philips) or their respective owners.

www.philips.com/lighting