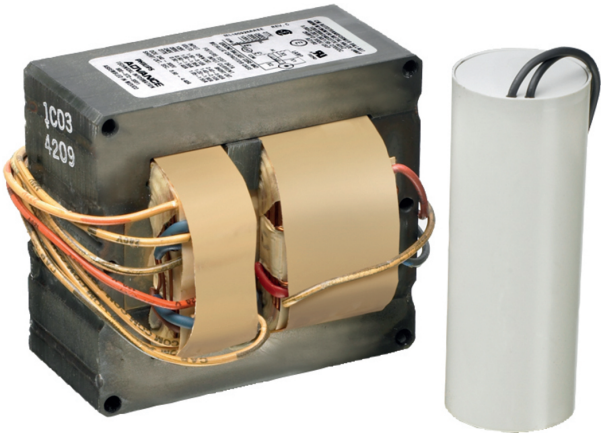

Core & Coil (71A) MH 175W - 450W

CORE & COIL HID MH BAL 250W M138/M153 QUAD KIT

The basic ballast is the open core and coil which is most often used as a component within a lighting luminaire. The core and coil also forms the nucleus of Philips Advance's five other ballast configurations.

Product data

• General Information

ANSI Code	M138/M153
Lamp Type	250W MH
Number of Lamps	1 piece/unit
Circuit Type	SUPER-CWA
Ballast Type	Magnetic HID
Base Model	71A5792A
Core Size	4 1/4 x 4 3/4 (2 coil)
Suitable For Outdoor Use	Yes
Ignitor Catalog Number	LI533-H4
Ignitor Temperature Rating	105°C
Capacitor Value	17 MFD
Capacitor Catalog Number	7C170P40
Capacitor Require-ments	330V
Capacitor Tempera-ture Rating	105°C
Capacitor Diameter/ Oval Dimensions	1.75 in
Capacitor Height	3.75 in
Automatic Restart	No

• Operating and Electrical

Input Voltage	120/208/240/277 V
Input Frequency	60 Hz
Inp. Current (Open Circuit)	1.4/0.8/0.7/0.65 A
Input Current (Starting)	1.9/1.1/0.96/0.85 A
Input Current (Short Circuit)	1.58-2.4/0.9-1.35/0.8-1.2/0.68-1.05 A
Secondary Short Circuit Current	2.38-2.9 A
Constant Wattage Deviation	10%
Ballast Factor (Nom)	1
Power Factor (Nom)	0.90
Nominal Open Circuit Voltage	275 V
Input Current (Oper-ating) (Nom)	2.5/1.45/1.25/1.1 A A
Input Power (Nom)	291 W
Rated Lamp Watts	250W W

• Wiring

Wire Striplength	0.5 mm
Wire Length By Color	12"
Wire Type	Stranded
Remote Wiring Configuration Allowed	Yes
Max Ballast-Lamp Distance Remote Wiring	5'
Recommended Fuse Value	8/5/5/3 A

• Approval and Application

Open Circuit Voltage Test (Volts)	250-300 V
Approbation Marks	ULR CSA certificate RoHS Compliant
Temperature Marking	A/A/A/A

PHILIPS

Core & Coil (71A) MH 175W - 450W

UL Recognized	Yes
Hipot Test (1 Minute)	1500 V
Hipot Test (2 Seconds)	2500 V
UL Insulation Class	H(180°C)
UL Temperature Code	1029A

EAN/UPC - Product	781087120804
Order code	71A5792001D
Local order code	112896
Numerator - Quantity Per Pack	1
Numerator - Packs per outer box	1
Material Nr. (12NC)	913710413901
Net Weight (Piece)	4.673 kg

- Product Data

Order product name	CORE & COIL HID 71A5792001D

Dimensional drawing

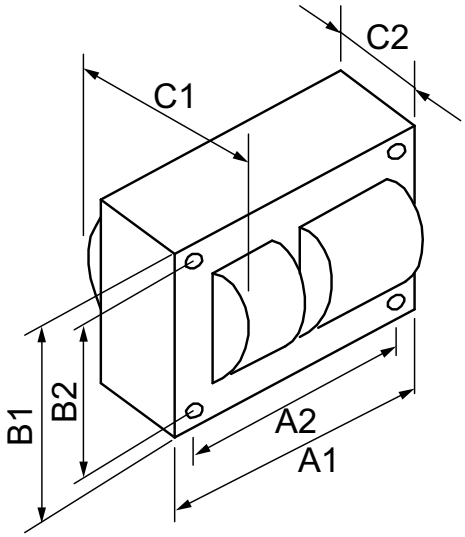

MH BAL 250W M138/M153 QUAD KIT

Product	C1	C2	A1	A2	B1	B2
CORE & COIL HID 71A5792001D	3.1 in	1.5 in	4.8 in	4.4 in	4.3 in	3.9 in

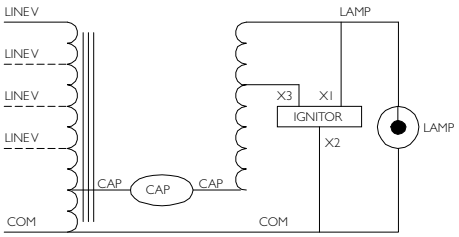

© 2015 Philips Lighting Holding B.V.
All rights reserved.

Specifications are subject to change without notice. Trademarks are the property of Koninklijke Philips N.V. (Royal Philips) or their respective owners.

www.philips.com/lighting

2015, November 29
data subject to change