GE Lighting

85110 - GE ConstantColor® CMH® Ceramic Metal Halide MR16

CMH20MR16/830/FL

Product Photo

GENERAL CHARACTERISTICS

Base Description	Turn and Lock
Base Temp C-degrees (MAX)	200 °C
Base Type	Turn and Lock
Bulb Temperature C-degree(MAX)	200 °C
Lamp Enclosure Type (LET)	Open or enclosed fixtures
Mercury-Picogrm per mean lm hr	183.3
Rated Life Hours-nominal	12000 h
Bulb Finishes and Colors	Clear
Mercury Content EMEA ONLY	2.2
Bulb Material	Hard glass
Primary Application	Indoor Floodlight
Product Technology	High Intensity Discharge
Base	GX10
Bulb Shape	MR16

PHOTOMETRIC CHARACTERISTICS

Rated Beam Spread	25 deg
Nominal Lumens per Watt	50 lm
Center Beam Candle Pwr Candela	2900 cd
Initial Lumens-nominal	1000 lm
Color Rendering Index-CRI	80
Color Temperature	3000 K

PRODUCT INFORMATION

Product Code	85110
Description	CMH20MR16/830/FL
Alternative Unit Of Measure	CASE

DIMENSIONS

Diameter	2.0 in

ELECTRICAL CHARACTERISTICS

Burn Position	Universal burning position
WarmUp Time to 90%[nom]	3 min
Open Circuit Voltage (peak lead ballast) (MIN)	95 V
Rated power (Watts)	20 W

CAUTIONS & WARNINGS

WARNING: This lamp can cause serious skin burn and eye inflammation from shortwave ultraviolet radiation if outer envelope of the lamp is broken or punctured, and the arc tube continues to operate. Do not use where people will remain for more than a few minutes unless adequate shielding or other safety precautions are used. Certain types of lamps that will automatically extinguish when the outer envelope is broken or punctured are commercially available. Visit the FDA website for more information: http://www.fda.gov/cdrh/radhealth/products/urburns.html

Caution

Risk of Burn

Allow lamp to cool before handling.

Do not turn on lamp until fully installed.

Lamp may shatter and cause injury if broken

Do not use excessive force when installing lamp.

Do not use lamp if outer glass is scratched or broken.

Warning

Unexpected lamp rupture may cause injury, fire, or property damage

Do not exceed rated voltage.

Do not store flammable materials near/below S-rated lamp in open fixture

Do not turn on lamp until fully installed.

Do not use beyond rated life.

Do not use lamp if outer glass is scratched or broken.

Do not use where directl

Risk of Electric Shock

Do not use where directly exposed to water or outdoors without an enclosed fixture.

Turn power off before inspection

installation or removal.

Risk of Fire

Keep combustible materials away from lamp.

Use fused or thermally protected ballast - see instructions.

Use in fixture rated for this product.

NOTES

Rated life based on 11 hours per start

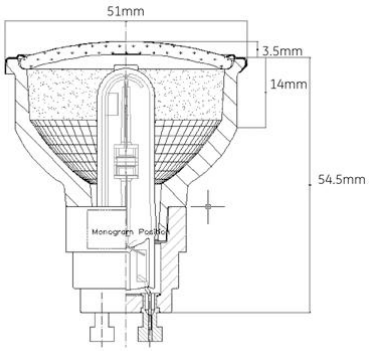

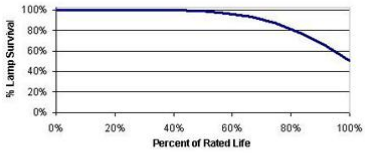

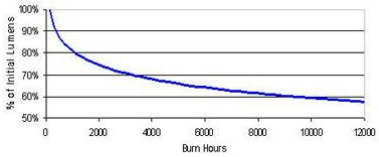

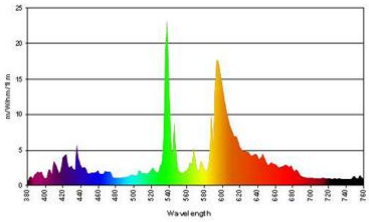

Sep 2, 2016 8:22:50 PM For additional information, visit www.gelighting.com