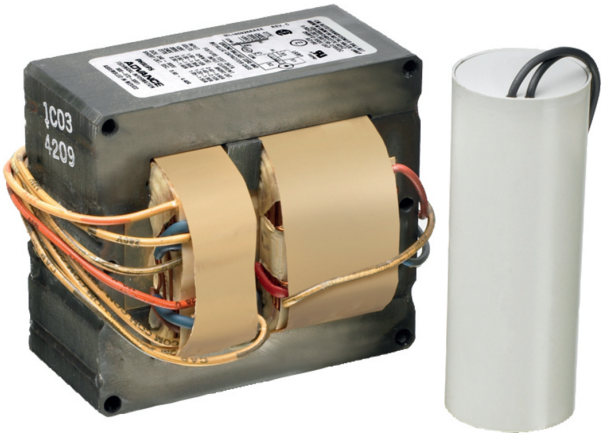

Core & Coil (71A) MH 175W - 450W

CORE & COIL HID MH BAL 400W M135/M155 5-TAP KIT

The basic ballast is the open core and coil which is most often used as a component within a lighting luminaire. The core and coil also forms the nucleus of Philips Advance's five other ballast configurations.

Product data

- General Information

ANSI Code	M135/M155
Lamp Type	400W MH
Number of Lamps	1 piece/unit
Circuit Type	SUPER-CWA
Ballast Type	Magnetic HID
Base Model	71A6052A
Core Size	4 1/4 x 4 3/4 (2 coil)
Suitable For Outdoor Use	Yes
Ignitor Catalog Number	LI533-H4
Ignitor Temperature Rating	105°C
Capacitor Value	26 MFD
Capacitor Catalog Number	7C260P33R
Capacitor Require-ments	330V
Capacitor Tempera-ture Rating	105°C
Capacitor Diameter/ Oval Dimensions	1.75 in
Capacitor Height	4.8 in
Automatic Restart	No

- Operating and Electrical

Input Voltage	120/208/240/277/480 V
Input Frequency	60 Hz
Inp. Current (Open Circuit)	2.7/1.6/1.3/0.8/0.65 A
Input Current (Starting)	3/1.7/1.5/1.2/0.75 A
Input Current (Short Circuit)	2.2-3.4/1.35-2.1/1.1-1.7/0.75-1.3/0.55-0.85 A
Secondary Short Circuit Current	3.6-4.4 A
Constant Wattage Deviation	10%
Ballast Factor (Nom)	1
Power Factor (Nom)	0.90
Nominal Open Circuit Voltage	275 V
Input Current (Oper-ating) (Nom)	3.8/2.3/1.9/1.65/0.95 A A
Input Power (Nom)	454 W
Rated Lamp Watts	400W W

- Wiring

Wire Striplength	0.5 mm
Wire Length By Color	12"
Wire Type	Stranded
Remote Wiring Configuration Allowed	Yes
Max Ballast-Lamp Distance Remote Wiring	2'
Recommended Fuse Value	10/7/5/5/3 A

- Approval and Application

Open Circuit Voltage Test (Volts)	250-305 V
Approbation Marks	ULR CSA certificate RoHS Compliant
Temperature Marking	B/D/D/B/D

PHILIPS

Core & Coil (71A) MH 175W - 450W

UL Recognized	Yes
Hipot Test (1 Minute)	2000 V
Hipot Test (2 Seconds)	2500 V
UL Insulation Class	H(180°C)
UL Temperature Code	1029D

EAN/UPC - Product	781087087695
Order code	71A6052001D
Numerator - Quantity Per Pack	1
Numerator - Packs per outer box	1
Material Nr. (12NC)	913701115001
Net Weight (Piece)	7.244 kg

- Product Data

Order product name	CORE & COIL HID 71A6052001D

Dimensional drawing

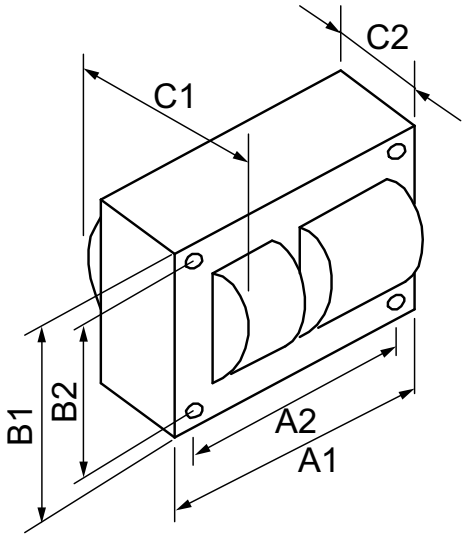

MH BAL 400W M135 OR M155 5-TAP KIT

Product	C1	C2	A1	A2	B1	B2
CORE & COIL HID 71A6052001D	4.3 in	2.2 in	4.8 in	4.4 in	4.3 in	3.9 in

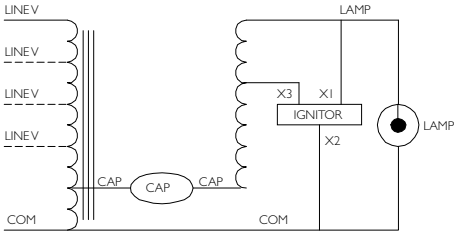

© 2016 Philips Lighting Holding B.V.
All rights reserved.

Specifications are subject to change without notice. Trademarks are the property of Koninklijke Philips N.V. (Royal Philips) or their respective owners.

www.philips.com/lighting

2016, February 1
data subject to change