# LED-90 Series

*THERMOPLASTIC LED EMERGENCY LIGHTING UNIT*

| | |
|---|---|
| Model Number: | Approvals: |
| Accessories: | |
| Job: Type: | |

**FEATURES**

- Each head contains 8 long-lasting, efficient, ultra-bright, white LEDs consuming 1.1 watts per head and providing 66 total fixture lumens
- Completely self-contained, compact, low-profile design
- Rugged, injection-molded UL94 V-0 flame retardant, high-temperature thermoplastic housing
- Remote capable - up to two 1.1 watt HLED remote heads
- AC lockout for ease of installation and installer protection
- Low voltage disconnect eliminates deep discharge
- Brown-out, short circuit and voltage surge protection
- Charge rate/power “ON” LED indicator light with test button
- Maintenance-free 3.6 volt NiCad battery
- UL listed 90 minute emergency run time, 24 hour recharge time
- Universal J-Box mounting system
- Optional Guardian Self-Test/Self-Diagnostics (G2) available
- Standard finishes: Black or white
- 120/277V dual primary, 60Hz input
- Suitable for damp location

The LED-90 Series combines a low-profile, contemporary appearance with LED economy and dependability. Fully adjustable heads complement any application.

**WARRANTY**

Any component that fails due to manufacturer’s defect is guaranteed for 3 years with a separate 5 year pro-rated warranty on the battery. The warranty does not cover physical damage, abuse or acts of God. Manufacturer reserves the right to charge for such repairs if deemed necessary.

3/5 WARRANTY

SPECIFICATIONS ARE SUBJECT TO CHANGE WITHOUT NOTICE

**ORDERING INFORMATION Example:** LED-90-G2

| Series | Finish | Options (Factory Installed) | Accessories[2] (Field Installed) |
|---|---|---|---|
| LED-90 | BLANK = White | G2 = Self-Test/Self-Diagnostics | WG-90 = Wire Guard (Back Mount) |
| | BL = Black | R[1] = Remote Capacity | XG-90 = Poly Guard (Back Mount) |
| | | | WPV-2 = Wet Location/Vandal Guard (Back Mount) |

[1] For use with single or double HLED remote lamps only
[2] Order as separate line item

## CONSTRUCTION

The LED-90 is a precision molded unit with lamp housings constructed of UV stable 5VA flame retardant, corrosion proof thermoplastic. Units resist denting, peeling, scratching and corrosion. Not recommended for outdoor use. Tool-less access provided for easy maintenance, universal J-box mounting pattern and keyhole slots provided for simple installation.

## ILLUMINATION

Illumination is accomplished utilizing high-intensity, long-life LEDs and consumes only 1 watt nominal power per head. LEDs provide excellent illumination while maximizing energy efficiency. LEDs are a maintenance-free solution, providing up to 100,000 hours of use without failure.

## ELECTRICAL

### Input

Dual-voltage input 120 or 277VAC @ 60Hz

### Sealed Nickel Cadmium Battery – NiCad

Exitronix sealed nickel cadmium batteries are maintenance-free with a life expectancy of 15 years. Nickel cadmium batteries offer high discharge rates and continue to perform in a vast temperature range from 0-40 degrees C. NiCad technology provides long lasting, safe and reliable performance by utilizing the jelly-roll design and allows a Ni-Cad cell to deliver a much higher maximum current than an equivalent size alternative battery. As a relatively larger area of the electrode is in contact with the active material in each cell, the internal resistance for an equivalent sized NiCad cell is lower which increases the maximum current that can be delivered.

### Emergency

The LED-90 will operate for a minimum of 90 minutes during a loss of power with a 24 hour maximum recharge time for the battery. The LED-90-R will run for 180 minutes in emergency mode if no remote load is connected.

### Brownout Circuit

The brownout circuit monitors the flow of AC current to the unit and triggers the emergency lighting system once a set reduction of AC power occurs. This dip in the voltage will cause many fixtures to extinguish causing loss of normal lighting even though a total power failure has not occurred.

### Low Voltage Disconnect

When the battery's terminal voltage falls below predetermined levels, the low-voltage circuit disconnects the emergency lighting load. The disconnect remains in effect until normal power is restored, preventing deep battery discharge and improving the life of the battery. The disconnect will also automatically reconnect the load circuit once the battery voltage returns to a normal value after charging.

### Solid-State Transfer

The unit features a solid-state switching transistor which eliminates damaged contacts or mechanical failures associated with relays. The switching circuit is designed to detect a loss of AC power and automatically energizes the lamps. Upon restoration of the AC voltage, the emergency lamps will switch off and the charger will automatically recharge the battery.

### Overload and Short-Circuit Protection

The solid-state overload monitoring system in the DC circuit disconnects the lamp load from the battery should excessive wattage demands be made and automatically resets when the overload or short-circuit is removed. This overload current protective characteristic eliminates the need for fuses or circuit breakers for the DC load.

### Test Button

Our easily located test button allows for manual verification of proper operation of the transfer circuit and emergency lamps.

## INSTALLATION

Units are mountable in any orientation, on wall or ceilings. A universal mounting pattern and rear keyhole slots are provided as well as top and side conduit entry options for ease of installation.

### Damp Location Rated (Option DR)

Damp location rating ensures the fixture is designed to operate safely in outdoor locations that are protected from the direct elements. Damp location rated fixtures may be installed indoors. Products with damp location ratings are not designed to withstand constant or significant moisture or direct contact with water or steam.

### Guardian Self-Test/Self-Diagnostics (Option: G2)

The Guardian circuit continuously monitors the operating condition of the AC power, battery supply voltage, emergency lamp continuity and charging circuit.

The purpose of this option is to provide visual signaling in response to a fault at the EXIT sign battery and/or battery charger. If a failure is detected, visual status will occur immediately via the CHARGER LED and/or the BATTERY FAULT LED. The LEDs will stay illuminated until the fault is corrected.

The Guardian circuit also monitors the transfer circuit as well as performing automatic code compliant testing. The Guardian circuit will perform a 30 second discharge and self-test every 28-30 days. A 90 minute discharge and self-test is performed every 6 months.

### Remote Capable (Option: R)

The R option provides this unit with an additional 2.2 watts of remote for use with HLED remote lamps.

## CONFORMANCE TO CODES & STANDARDS

The LED-90 Series is UL listed and meets or exceeds the following: UL 924, NEC requirements and NFPA 101.

## REMOTE LAMPS (Order Separately)

### FEATURES

- Each lamp contains 8 long lasting, efficient ultra-bright white LEDs.
- For use with LED-90 or 400C units only
- Wet location option available

Single Lamp with
Weatherproof (WP) Option

Double Lamp with
No Options

**REMOTE ORDERING INFORMATION** **Example:** HLED-G2

| Series | Options |
|---|---|
| HLED = Single Remote Lamp | G2 = Self Test / Diagnostics |
| 2HLED = Double Remote Lamp | WP = Weatherproof Applications |

Order remote lamps as separate line item

Remote lamps with G2 option are compatible with LED emergency lighting units with G2 option only.

**SAMPLE PHOTOMETRICS**

Using multiple units mounted at a typical 7.5' delivers 18' center-to-center spacing on a 3' wide egress path.

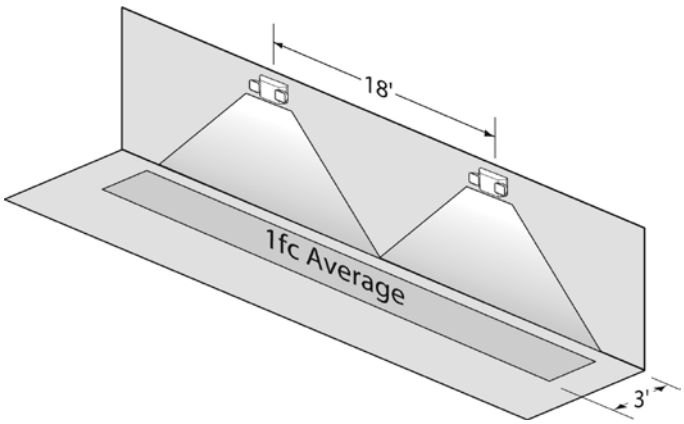


Using multiple units mounted at a typical 7.5' delivers 14' center-to-center spacing on a 6' wide egress path.

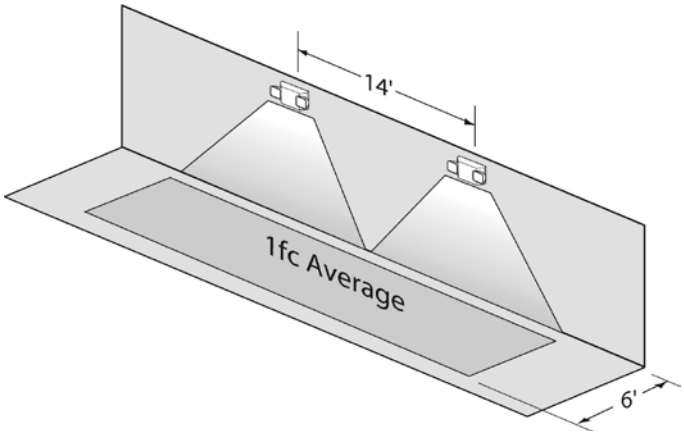

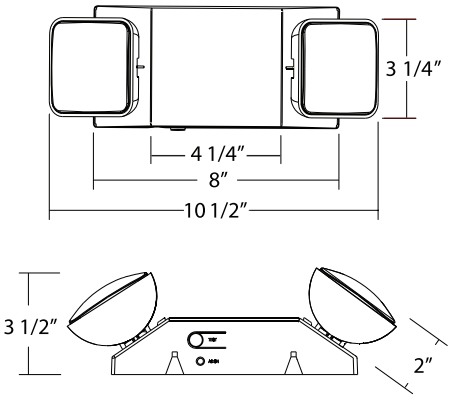
**DIMENSIONS**