MasterColor CDM-TM

CDM20/TM/830 12PK

Introducing the smallest 20W ceramic metal halide lamp together with the unique e-Vision® electronic ballast. It's visually pleasing and financially rewarding, so the focus can be on your merchandise and not the ceiling clutter.

Product data

- General Information

Cap-Base	PGJ5 [PGJ5]
Operating Position	Universal [Universal]
Life To 5% Failures (Nom)	9000 h
Life To 10% Failures (Nom)	10000 h
Life To 20% Failures (Nom)	11000 h
Life To 50% Failures (Nom)	12000 h

- Light Technical

Color Code	830 [CCT of 3000K]
Luminous Flux (Rated) (Nom)	1650 lm
Color Designation	Warm White (WW)
Lumen Maintenance 1000 h (Nom)	80 %
Lumen Maintenance 10000 h (Nom)	60 %
Lumen Maintenance 2000 h (Nom)	75 %
Lumen Maintenance 5000 h (Nom)	65 %
Chromaticity Coordinate X (Nom)	0.433
Chromaticity Coordinate Y (Nom)	0.392
Correlated Color Temperature (Nom)	3000 K
Luminous Efficacy (rated) (Nom)	75 lm/W
Color Rendering Index (Min)	84
Color Rendering Index (Nom)	87

- Operating and Electrical

Power (Rated) (Nom)	22.0 W
Lamp Current Run-Up (Max)	.5 A
Re-Ignition Time (Min) (Max)	15 min
Ignition Time (Max)	30 s
Voltage (Max)	108 V
Voltage (Min)	95 V
Voltage (Nom)	100 V

- Controls and Dimming

Dimmable	No
Run-Up Time 90% (Max)	3 min

- Mechanical and Housing

Bulb Finish	Clear (CL)

- Approval and Application

Energy Efficiency Label (EEL)	A
Mercury (Hg) Content (Nom)	2.4 mg
Energy Consumption kWh/1000 h	24 kWh

PHILIPS

- UV

Pet (Niosh) (Min)	8 h/500lx
Damage Factor D/fc (Max)	0.5

- Luminaire Design Requirements

Bulb Temperature (Max)	380 °C
Cap-Base Temperature (Max)	250 °C

- Product Data

Order product name	CDM20/TM/830 12PK
EAN/UPC - Product	046677140403
Order code	140400
Numerator - Quantity Per Pack	1
Numerator - Packs per outer box	12
Material Nr. (12NC)	928087905115
Net Weight (Piece)	0.005 kg
ILCOS Code	MT/UB-20/830-H/L-PGJ5-13.3/52

Warnings and Safety

- R "WARNING: These lamps can cause serious skin burn and eye inflammation from short wave ultraviolet radiation if outer envelope of the lamp is broken or punctured. Do not use where people will remain for more than a few minutes unless adequate shielding or other safety precautions are used. Certain lamps that will automatically extinguish when the outer envelope is broken or punctured are commercially available." This lamp complies with FDA radiation performance standard 21 CFR subchapter J. (USA:21 CFR 1040.30 Canada: SOR/DORS/80-381)

Dimensional drawing

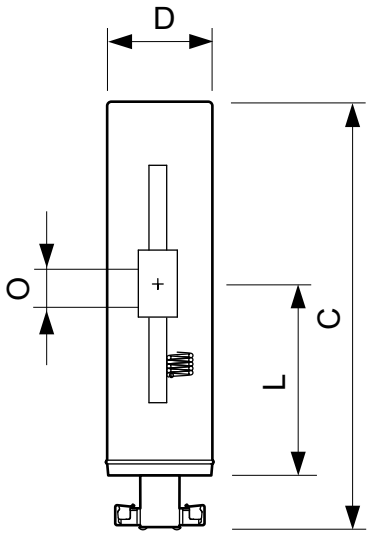

MASTERColour CDM-Tm PGJ5 T13.3

CDM-Tm 20W/830 PGJ5

Product	D	D	O	L	L	L	C
CDM20/TM/830 12PK	13.3 mm	0.44 in	3 mm	22.3 mm	22.9 mm	22.6 mm	52 mm

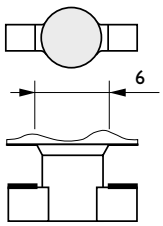

Photometric data

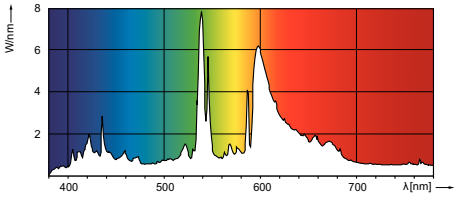

© 2016 Philips Lighting Holding B.V.
All rights reserved.

Specifications are subject to change without notice. Trademarks are the property of Koninklijke Philips N.V. (Royal Philips) or their respective owners.