13550-W

Lampholders

Color: White

UPC Code: 07847706089

Country of Origin: Please Contact Customer Service

Item Description

Discontinued Product. High-Output Base, Double Contact Horz., Standard Fluorescent Lampholder, Pedestal, Slide-On, Plunger, , Quickwire 18AWG Solid or Str Tinned - White

Technical Information

Electrical Specifications

Voltage: 1000 Volt

Rated Wattage: 660W

Material Specifications

Body Material: Thermoset

Contact Material: Silver-Plated Copper-Alloy

Color: White

Availability: Distribution

Mechanical Specifications

Mounting Type: Slide-On

Panel Thickness: 20 Ga. Panel

Contact Type: Plunger

Termination: Quickwire 18AWG Solid or Str Tinned

Wire Strip Length: 3/8 - 1/2 Inch

Product Features

Lamp Base: High-Output

Lamp Contacts: Double Contact Horz.

Style Name: Pedestal

Mounting Type: Slide-On

Panel Thickness: 20 Ga. Panel

Contact Type: Plunger

Termination: Quickwire 18AWG Solid or Str Tinned

Rated Wattage: 660W

Color: White

Standards and Certifications: UL/CSA/NOM

Warranty: 1 Year Limited

Availability: Distribution

Standards and Certifications

UL Listed: File E5833

CSA Certified: File LR-5863

NOM Certified: 057

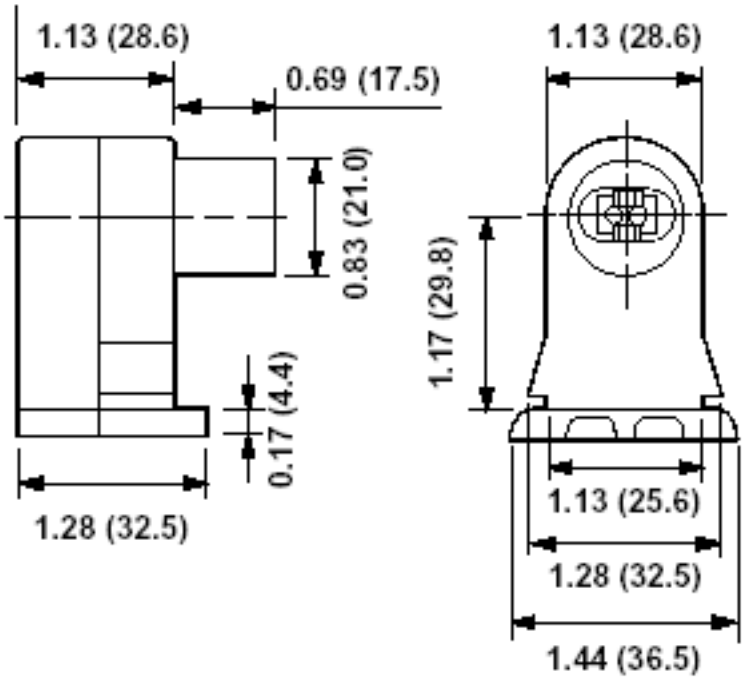

SPECIFICATION SUBMITTAL

JOB NAME:	CATALOG NUMBERS:	
JOB NUMBER:		

Leviton Manufacturing Co., Inc.
201 North Service Road, Melville, NY 11747
Telephone: 1-800-323-8920 · FAX: 1-800-832-9538 · Tech Line (8:30AM-7:30PM E.S.T. Monday-Friday): 1-800-824-3005

Leviton Manufacturing of Canada, Ltd.
165 Hymus Boulevard, Pointe Claire, Quebec H9R 1E9 · Telephone: 1-800-469-7890 ·
FAX: 1-800-824-3005 · www.leviton.com/canada

Leviton S. de R.L. de C.V.
Lago Tana 43, Mexico DF, Mexico CP 11290 · Tel.: (+52)55-5082-1040 · FAX: (+52)5386-1797 · www.leviton.com.mx

Visit our Website at: www.leviton.com
© 2012-2016 Leviton Manufacturing Co., Inc. All rights reserved. Subject to change without notice.

Leviton has a global presence.
If you would like to know where your local Leviton office is located please go to: www.leviton.com/international/contacts/