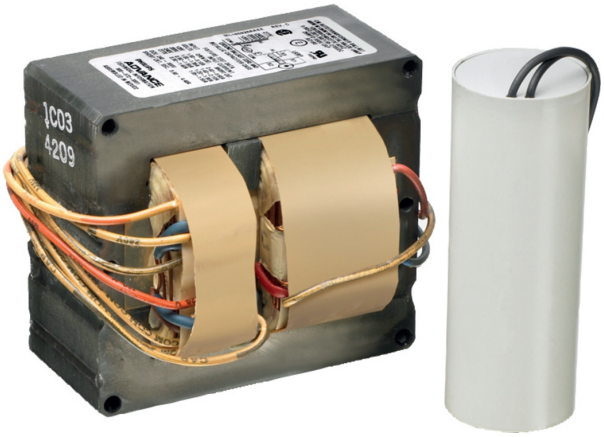

Core & Coil (71A) MH > 450W

CORE & COIL HID MH BAL 1000W M47 QUAD KIT

The basic ballast is the open core and coil which is most often used as a component within a lighting luminaire. The core and coil also forms the nucleus of Philips Advance's five other ballast configurations.

Product data

• General Information

ANSI Code	M47
Lamp Type	1000W MH
Number of Lamps	1 piece/unit
Circuit Type	CWA
Ballast Type	Magnetic HID
Base Model	71A6572
Core Size	4 1/4 x 6 (2 Coil)
Suitable For Outdoor Use	Yes
Ignitor Catalog Number	NA
Ignitor Temperature Rating	NA
Capacitor Value	24 MFD
Capacitor Catalog Number	MD2409000
Capacitor Require-ments	480V
Capacitor Tempera-ture Rating	90°C
Capacitor Diameter/ Oval Dimensions	1.75 in
Capacitor Height	3.9 in
Automatic Restart	No

• Operating and Electrical

Input Voltage	120/208/240/277 V
Input Frequency	60 Hz
Inp. Current (Open Circuit)	4.5/2.7/2.3/2.2 A
Input Current (Starting)	7.8/4/3.7/3.2 A
Input Current (Short Circuit)	5.6-8.6/3.2-4.8/2.8-4.3/2.4-3.6 V
Secondary Short Circuit Current	5.2-6.4 A
Constant Wattage Deviation	10%
Ballast Factor (Nom)	1
Power Factor (Nom)	0.90
Nominal Open Circuit Voltage	430 V
Input Current (Oper-ating) (Nom)	9/5.2/4.5/3.9 A A
Input Power (Nom)	1080 W
Rated Lamp Watts	1000W W

• Wiring

Wire Striplength	0.5 mm
Wire Length By Color	12"
Wire Type	Stranded
Remote Wiring Configuration Allowed	Yes
Max Ballast-Lamp Distance Remote Wiring	Determined by AWG used
Recommended Fuse Value	20/15/10/10 A

• Approval and Application

Open Circuit Voltage Test (Volts)	385-475 V
Approbation Marks	ULR CSA certificate RoHS Compliant
Temperature Marking	D/B/B/B

PHILIPS

Core & Coil (71A) MH > 450W

UL Recognized	Yes
Hipot Test (1 Minute)	2000 V
Hipot Test (2 Seconds)	2500 V
UL Insulation Class	H(180°C)
UL Temperature Code	1029D

EAN/UPC - Product	781087657218
Order code	71A6572001
Numerator - Quantity Per Pack	1
Numerator - Packs per outer box	1
Material Nr. (12NC)	913700525609
Net Weight (Piece)	9.966 kg

- Product Data

Order product name	CORE & COIL HID 71A6572001

Dimensional drawing

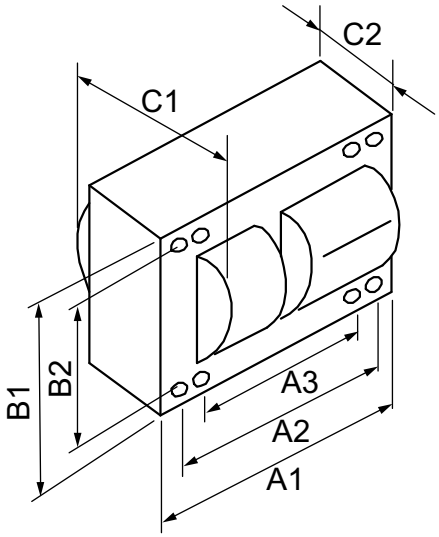

MH BAL 1000W M47 QUAD KIT

Product	C1	C2	A1	A2	A3	B1	B2
CORE & COIL HID 71A6572001	5 in	3.05 in	6 in	5.4 in	4.4 in	4.3 in	3.9 in

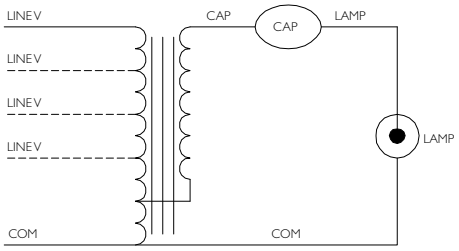

© 2016 Philips Lighting Holding B.V.
All rights reserved.

Specifications are subject to change without notice. Trademarks are the property of Koninklijke Philips N.V. (Royal Philips) or their respective owners.

www.philips.com/lighting

2016, February 1
data subject to change