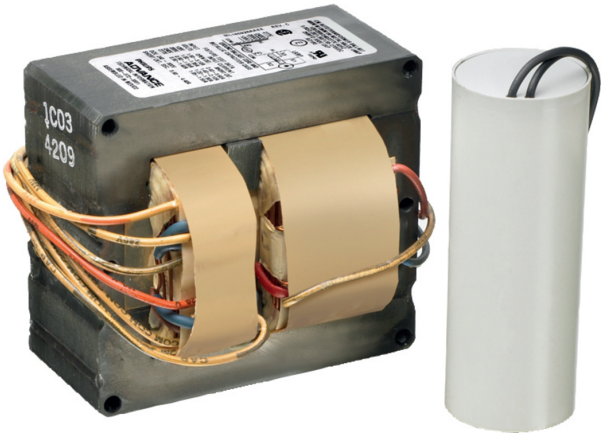

Core & Coil (71A) HPS 200W - 400W

CORE & COIL HID HPS BAL 250W S50 QUAD KIT

The basic ballast is the open core and coil which is most often used as a component within a lighting luminaire. The core and coil also forms the nucleus of Philips Advance's five other ballast configurations.

Product data

- General Information

ANSI Code	S50
Lamp Type	250W HPS
Number of Lamps	1 piece/unit
Circuit Type	CWA
Ballast Type	Magnetic HID
Base Model	71A8271
Core Size	4 x 4 (2 coil)
Suitable For Outdoor Use	Yes
Ignitor Catalog Number	LI501-H4
Ignitor Temperature Rating	105°C
Capacitor Value	35 MFD
Capacitor Catalog Number	7C350P24RA
Capacitor Require-ments	240V
Capacitor Tempera-ture Rating	105°C
Capacitor Diameter/ Oval Dimensions	1.65 in
Capacitor Height	3.7 in
Automatic Restart	No

- Operating and Electrical

Input Voltage	120/208/240/277 V
Input Frequency	60 Hz
Inp. Current (Open Circuit)	1.53/0.95/0.77/0.63 A
Input Current (Starting)	1.61/0.89/0.8/0.68 A
Input Current (Short Circuit)	1.16-1.74/0.64-0.96/0.56-0.85/0.49-0.7 4 A
Secondary Short Circuit Current	3.65-4.45 A
Constant Wattage Deviation	Within Trapezoid
Ballast Factor (Nom)	1
Power Factor (Nom)	0.90
Nominal Open Circuit Voltage	187 V
Input Current (Oper-ating) (Nom)	2.5/1.47/1.25/1.09 A A
Input Power (Nom)	295 W
Rated Lamp Watts	250W W

- Wiring

Wire Striplength	0.5 mm
Wire Length By Color	12"
Wire Type	Stranded
Remote Wiring Configuration Allowed	Yes
Max Ballast-Lamp Distance Remote Wiring	2'
Recommended Fuse Value	7/4/4/3 A

- Approval and Application

Open Circuit Voltage Test (Volts)	170-205 V
Approbation Marks	ULR CSA certificate RoHS Compliant
Temperature Marking	B/B/B/B

PHILIPS

Core & Coil (71A) HPS 200W - 400W

UL Recognized	Yes
Hipot Test (1 Minute)	2000 V
Hipot Test (2 Seconds)	2500 V
UL Insulation Class	H(180°C)
UL Temperature Code	1029B

EAN/UPC - Product	781087827116
Order code	71A8271001D
Numerator - Quantity Per Pack	1
Numerator - Packs per outer box	1
Material Nr. (12NC)	913700556609
Net Weight (Piece)	5.657 kg

- Product Data

Order product name	CORE & COIL HID 71A8271001D

Dimensional drawing

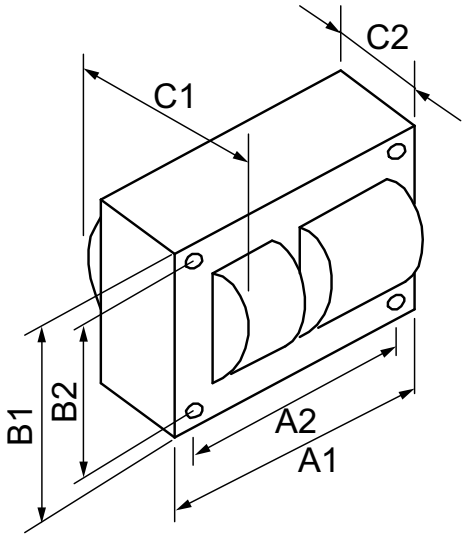

HPS BAL 250W S50 QUAD C&C

Product	C1	C2	A1	A2	B1	B2
CORE & COIL HID 71A8271001D	3.82 in	1.8 in	4.8 in	4.4 in	4.3 in	3.9 in

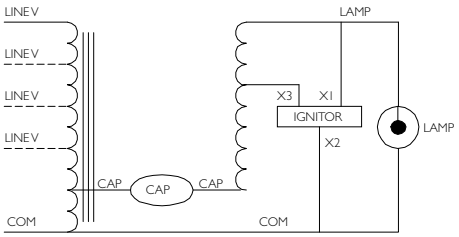

© 2015 Philips Lighting Holding B.V.
All rights reserved.

Specifications are subject to change without notice. Trademarks are the property of Koninklijke Philips N.V. (Royal Philips) or their respective owners.

www.philips.com/lighting

2015, December 24
data subject to change