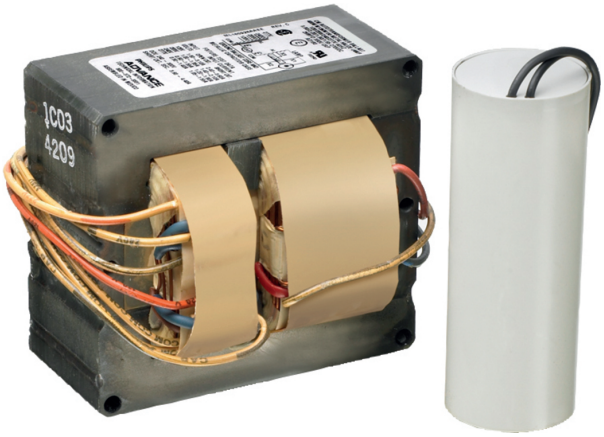

Core & Coil (71A) MH > 450W

CORE & COIL HID MH BAL 1000W M47 5-TAP KIT

The basic ballast is the open core and coil which is most often used as a component within a lighting luminaire. The core and coil also forms the nucleus of Philips Advance's five other ballast configurations.

Product data

General Information

Ansi Code	M47
Lamp Type	1000W MH
Number of Lamps	1 piece/unit
Circuit Type	CWA
Ballast Type	Magnetic HID
Base Model	71A6552
Core Size	4 1/4 x 6 (2 Coil)
Suitable For Outdoor Use	Yes
Ignitor Catalog Number	NA
Ignitor Temperature Rating	NA
Capacitor Value	24 MFD
Capacitor Catalog Number	MD2409000
Capacitor Require-ments	480V
Capacitor Tempera-ture Rating	90°C
Capacitor Diameter/ Oval Dimensions	1.75 in
Capacitor Height	3.90 in
Automatic Restart	No

Operating and Electrical

Input Voltage	120/208/240/277/480 V
Input Frequency	60 Hz
Inp. Current (Open Circuit)	4.96/3.84/2.77/2.35/1.37 A
Input Current (Starting)	5.77/2.91/2.78/2.39/1.38 A
Input Current (Short Circuit)	4.36-6.64/2.14-3.2/2.1-3.14/1.82-2.74/ 1.04-1.56 V
Secondary Short Circuit Current	5.22-6.38 A
Constant Wattage Deviation	10%
Ballast Factor (Nom)	1
Power Factor (Nom)	0.90
Nominal Open Circuit Voltage	430 V
Input Current (Oper-ating) (Nom)	9.2/5.8/4.8/4.1/2.4 A A
Input Power (Nom)	1080 W
Rated Lamp Watts	1000W W

Wiring

Wire Striplength	0.5 mm
Wire Length By Color	12"
Wire Type	Stranded
Remote Wiring Configuration Allowed	Yes
Max Ballast-Lamp Distance Remote Wiring	Determined by AWG used
Recommended Fuse Value	25/15/12/10/6 A

Approval and Application

Open Circuit Voltage Test (Volts)	387-473 V
Approbation Marks	ULR CSA certificate RoHS Compliant
Temperature Marking	A/A/A/A/A

PHILIPS

Core & Coil (71A) MH > 450W

UL Recognized	Yes
Hipot Test (1 Minute)	2000 V
Hipot Test (2 Seconds)	2500 V
UL Insulation Class	N(AC200°C)
UL Temperature Code	1029A

EAN/UPC - Product	781087111833
Order code	71A6552001
Numerator - Quantity Per Pack	1
Numerator - Packs per outer box	1
Material Nr. (12NC)	913710401201
Net Weight (Piece)	11.762 kg

- Product Data

Order product name	CORE & COIL HID 71A6552001

Dimensional drawing

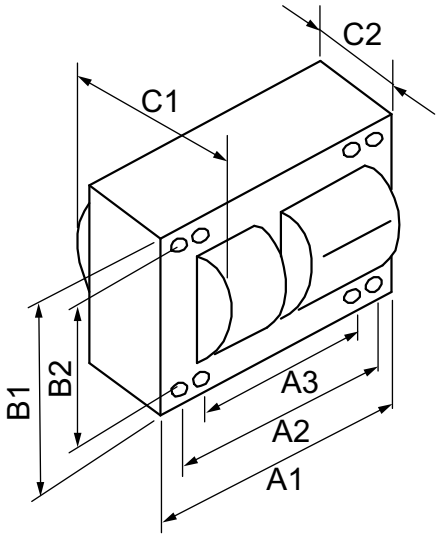

MH BAL 1000W M47 5-TAP KIT

Product	C1	C2	A1	A2	A3	B1	B2
CORE & COIL HID 71A6552001	5.6 in	3.90 in	6 in	5.4 in	4.4 in	4.3 in	3.9 in

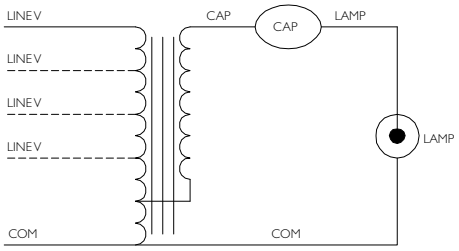

© 2015 Philips Lighting Holding B.V.
All rights reserved.

Specifications are subject to change without notice. Trademarks are the property of Koninklijke Philips N.V. (Royal Philips) or their respective owners.

www.philips.com/lighting

2015, November 29
data subject to change