CE-15050

Commercial Exit Signs

VE Series

Value+ Economy Grade Thermoplastic

VE

VRE (Remote Capability)

Specifier's Reference

Project
Type
Model No.
Comments

codes and standards

- UL listed to Standard 924
- NFPA 70 (National Electric Code)
- NFPA 101 (Life Safety Code)
- California Energy Commission
- UL listed for damp location

construction

- Black and white finishes are epoxy-based powder coat paint.
- Low profile, snap-together quick mount design.
- Flame rated, UV stable thermoplastic housing.

installation

- Universal wall/ceiling/end mounting.
- Canopy not required for flat wall mount. (electronics contained inside housing).
- Pop-out chevron directional indicators are easily removed when required.
- Exit sign mounts to a standard 4" square outlet box. (canopy provided)
- All exits signs are provided with an extra stencil face plate for double face sign applications.

electronics

- 120/277 VAC selectable input.
- VE Units: AC Only
  Input Power: 0.026A (120VAC)
  Input Power: 0.012A (277VAC)
- VE Units: Emergency
  Input Power: 0.033A (120VAC)
  Input Power: 0.017A (277VAC)
- VRE Units: Emergency
  Input Power: 0.030A (120VAC)
  Input Power: 0.014A (277VAC)
- Surge protection, low voltage disconnect, AC lockout installation, brown out protection, and constant current charger.

battery

- VE Exits contain 6V maintenance free nickel cadmium battery with a service life of 8 to 10 years and a operating temperature range of 20˚F (-7˚C) to 104˚F (40˚C).
- VRE exits contain a maintenance free sealed lead acid battery with a service life of 5 to 7 years and a operating temperature range of 65˚F (19˚C) to 85˚F (30˚C).
- Provides 90 minutes of emergency illumination.

lamps

- Bright red or green energy efficient LED lamps. Uniform 6" letter illumination (3/4" stroke).

remote capacity

- Optional remote capacity model includes 6V maintenance-free sealed lead acid batteries.
- Supplies 90 minutes of emergency power for exit sign plus an additional 22W of 6V-DC load.

warranty

- Three year warranty on unit.

Green Product Choice: VERWEM

Exit Signs

Catalog Number	Letter Color	Housing Color	Operation	Optional Feature
VERW	Red	White	AC only	
VERB	Red	Black	AC only	
VEGW	Green	White	AC only	
VEGB	Green	Black	AC only	
VERWEM	Red	White	Emergency (nicad battery)	
VERWEMSD	Red	White	Emergency (nicad battery)	Self Diagnostic Circuitry
VERBEM	Red	Black	Emergency (nicad battery)	
VEGWEM	Green	White	Emergency (nicad battery)	
VEGWEMSD	Green	White	Emergency (nicad battery)	Self Diagnostic Circuitry
VEGBEM	Green	Black	Emergency (nicad battery)	

Green Product Choice: VRERWEM

Exit Signs With Remote Capability

Catalog Number	Letter Color	Housing Color	Operation	Remote Capacity
VRERWEM	Red	White	Emergency	22 Watts (lead acid battery)
VREGWEM	Green	White	Emergency	22 Watts (lead acid battery)

Accessories

VEPMC – Pendant mount canopy, white, for VE & VRE only (requires stem assembly).
PVS2 – Polycarbonate shield for VE only.
WG4 – Wire guard for VE & VRE only.

Note:

All exit signs are universal (single face with an extra stencil face plate)
Canopy provided on all exits.

© 2013 Koninklijke Philips Electronics N.V. All rights reserved.
Specifications are subject to change without notice.

PHILIPS CHLORIDE

dimensions

VE

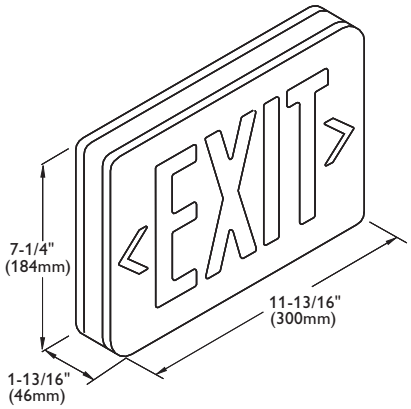

Canopy

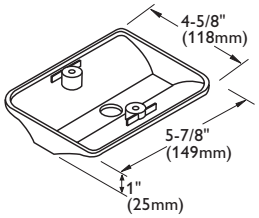

VRE

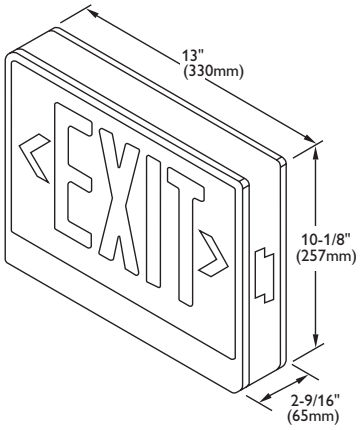

© 2013 Koninklijke Philips Electronics N.V. All rights reserved.
Specifications are subject to change without notice.

CE-15050 03/13

Philips Lighting Company
200 Franklin Square Drive
Somerset, NJ 08873
Phone: 855-486-2216
www.philips.com/luminaires

Philips Lighting Company
281 Hillmount Road
Markham ON, Canada L6C 2S3
Phone: 800-668-9008
www.philips.com/luminaires