MasterColor CDM-T Elite Med Wattage

MasterColor CDM-T Elite 315W/930 T9 1CT

The Philips MasterColor Elite MW system offers an unrivalled level of light quality and performance. The lamp's sparkling white light creates a natural ambience and really brings out the best in all different types of colors. In addition, the high efficiency of the lamp and ballast together means reduced energy use and a lower cost of ownership compared to a 400W Metal Halide HID system.

Product data

- General Characteristics

Base	PGZ18
Bulb	T-9 [9/8 inch/1.1 inch = 28 mm]
Bulb Finish	Clear
Operating Position	Universal [Any or Universal (U)]
Life to 5% failures EL	12500 hr
Life to 10% failures EL	16000 hr
Avg. Hrs. Life	30000 hr

- Light Technical Characteristics

Color Code	930 [CCT of 3000K]
Color Rendering Index	87 (min), 90 (nom) Ra8
Color Designation	Warm White
Color Temperature	3090 K
Color Temperature technical	3090 K
Initial Lumens	38700 Lm
Luminous Efficacy Lamp EL	120 Lm/W
Lumen Maintenance 2000h	99 %
Lumen Maintenance 5000h	96 %
Lumen Maintenance 8000h	92 %
Lumen Maintenance EL 10000h	90 %
Lumen Maintenance 12000h	89 %
Lumen Maintenance 20000h	80 %
Lumen Maintenance - 10% life	96 %
Lumen Maintenance - 40% life	89 %
Design Mean Lumens	34440 Lm
Chromaticity Coordinate X	0.429 -
Chromaticity Coordinate Y	0.398 -

- Electrical Characteristics

Watts	315 W
Lamp Wattage EL 25°C, Rated	315.0 W
Lamp Wattage EL 25°C, Nominal	315.0 W
Lamp Voltage	100 V
Lamp Current EL	3.15 A
Lamp Current Run-Up	4.7 A
Ignition Time	3 (max) s
Run-up time 90%	1.5 (max) min
Re-ignition Time [min]	10 (max) min

- Environmental Characteristics

Energy Efficiency Label (EEL)	A+
Mercury (Hg) Content	28 (max) mg
Picogram per Lumen Hour	27.1 p/LuHr
Energy consumption kWh/1000h	346 kWh

PHILIPS

MasterColor CDM-T Elite Med Wattage

- UV-related Characteristics

Damage Factor D/fc	0.013 -
PET (NIOSH)	141 h500lx
UV A	3.45 mW/cm2
UV B	0.01 mW/cm2
UV C	0.03 mW/cm2

- Luminaire Design Requirements

Cap-Base Temperature	250 C
Pinch Temperature	300 (max) C
Bulb Temperature	600 (max) C

- Product Dimensions

Overall Length C	186 (nom), 188 (max) mm
Diameter D	28 (nom), 29 (max) mm
Light Center Length L	88 (min), 90 (nom), 92 (max) mm
Arc Length O	16 mm
Maximum Overall Length [inch]	7.4 (max) in
Light Center Length L	3.54 in
Diameter D	1.1 in

- Product Data

Product number	218313
Full product name	MasterColor CDM-T Elite 315W/930 T9 1CT
Short product name	CDM T9 ELITE 315W/930/E NA
Pieces per Sku	1
eop_pck_cfg	12
Skus/Case	12
Bar code on pack	46677218317
Bar code on case	50046677218312
Logistics code(s)	928601164602
tpd_ilcos_cd	MT-315/30/1A-H-PGZ18
eop_net_weight_pp	0.001 kg

Warnings and Safety

- R "WARNING: These lamps can cause serious skin burn and eye inflammation from short wave ultraviolet radiation if outer envelope of the lamp is broken or punctured. Do not use where people will remain for more than a few minutes unless adequate shielding or other safety precautions are used. Certain lamps that will automatically extinguish when the outer envelope is broken or punctured are commercially available." This lamp complies with FDA radiation performance standard 21 CFR subchapter J. (USA:21 CFR 1040.30 Canada: SOR/DORS/80-381)

Dimensional drawing

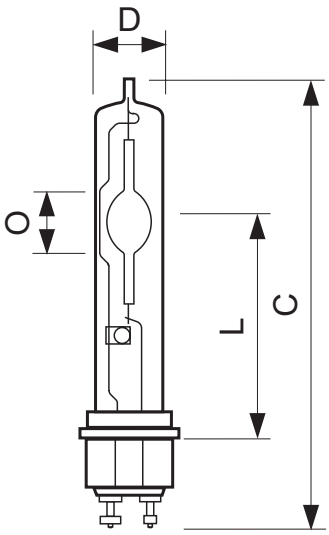

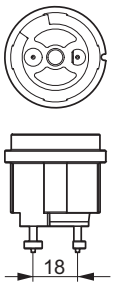

PGZ18

MasterColor CDM-T Elite 315W/930 T9 1CT

Product	C (Norm)	C (Max)	D (Norm)	D (Max)
CDM TMW 315W/930 PGZ18 U	186	188	28	29

Photometric data

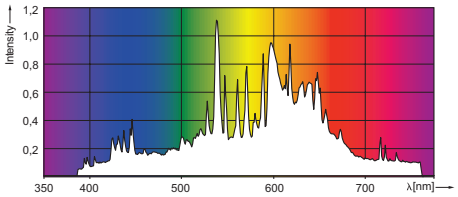

CDM-TMW 315W /930

© 2015 Koninklijke Philips N.V. (Royal Philips)
All rights reserved.

Specifications are subject to change without notice. Trademarks are the property of Koninklijke Philips N.V. (Royal Philips) or their respective owners.

www.philips.com/lighting

2015, August 29
data subject to change