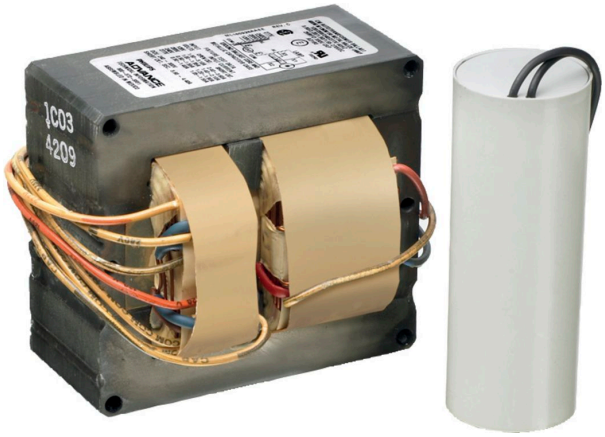

Core & Coil (71A) HPS 200W - 400W

CORE & COIL HID HPS BAL 400W S51 5-TAP KIT

The basic ballast is the open core and coil which is most often used as a component within a lighting luminaire. The core and coil also forms the nucleus of Philips Advance's five other ballast configurations.

Product data

General Characteristics

Lamp Type	400W HPS
Number of Lamps	1 piece
Line Voltage	120/208/240/277/480 V
Input Current (Operating)	3.85/2.2/1.95/1.75/0.95 A
Line Frequency	60 Hz
Circuit Type	CWA
Ballast Type	Magnetic HID
Base Model	71A8453
Core Size	4 x 4 (2 coil)
Suitable for Outdoor use?	Yes
Ignitor Catalog Number	LI501-H4
Ignitor Temp Rating	105°C
Capacitor value [µF]	55 MFD
Capacitor Catalog Number	7C550P24RA
Capacitor Requirements	240V
Capacitor Temp Rating	105°C
Capacitor Dia/Oval Dim	1.85 in
Capacitor Height	3.70 in
Family Name	Core & Coil HPS

Operating Characteristics

Automatic restart	No
Input Voltage at Lamp Dropout	82/101/129/153/218 V
Nominal Open Circuit Voltage	190 V
Inp. Current (Open Circuit)	1.73/1.0/0.89/0.73/0.41 A
Input Current (Starting)	2.91/1.67/1.42/1.26/0.72 A
Input Current Short Circuit	2.48-3.72/1.4-2.1/1.24-1.86/1.07-1.61/0.62-0.94 A
Secondary ShortCircuit Current	6.0-7.4 A
Input Power Gear	460 W
Constant wattage deviation	Within Trapezoid
Ballast factor	1 -
Power Factor	0.90

Wiring Characteristics

Wire Striplength	0.5 mm
Wire Length by Color	12"
Wire Type	Stranded
Allowed Wiring Config(Remote)	Yes
Max Dist. Ball to Lamp(Remote)	2'
Recommended Fuse	10/6/5/5/3 A

System Chars on driver level

Rated Lamp Watts	400W

Product Dimensions

Length A1	4.8 in
Length A2	4.4 in
Width B1	4.3 in
Coil Depth C1	4.84 in
Stack Height C2	2.65 in
Width B2	3.9 in

PHILIPS

Core & Coil (71A) HPS 200W - 400W

- Approval & Application Chars

Approbation Marks	ULR, CSA, RoHS
CE marking	No
VDE certificate	No
UL Listed	No
CSA certificate	Yes
CCC certificate	No
Chia Quality Certificate	No
Temperature marking	C/C/D/D/C
CEC Listing	No
cUL certificate	No
EISA	No
ETL Certificate	No
FIDE Certificate	No
NOM certificate	No
RoHS Compliant	Yes
SASO Certificate	No
UL Recognized	Yes
ANSI Code	S51/M169
HiPot Test (1 minute)	2000 V
HiPot Test (2 seconds)	2500 V
Open Circ Voltage Test (Volts)	176-214 V
UL Insulation Class	H(180°C)
UL Temperature Code	1029D

- Product Data

Product number	71A8453001D
Full product name	HPS BAL 400W S51 5-TAP KIT
Short product name	HPS BAL 400W S51 5-TAP KIT
Pieces per Sku	1
Skus/Case	1
Bar code on pack	781087111819
Bar code on case	30781087111810
Logistics code(s)	913710414801
eop_net_weight_pp	7.771 kg

Dimensional drawing

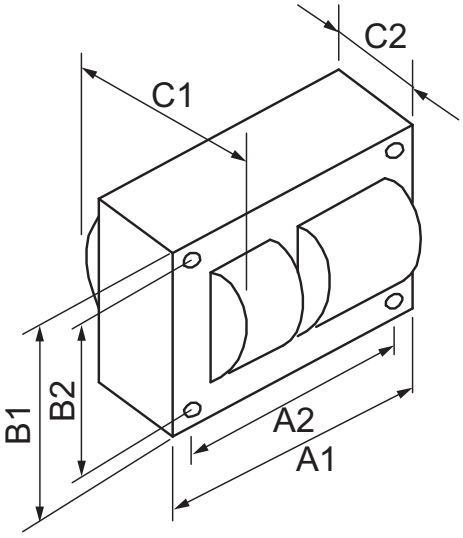

CORE & COIL HID HPS BAL 400W S51 5-TAP KIT

Product	A1 (Norm)	A2 (Norm)	A3 (Norm)	B1 (Norm)	B2 (Norm)	C1 (Norm)	C2 (Norm)
HPS BAL 400W S51 5-TAP KIT	4.8	4.4	-	4.3	3.9	4.84	2.65

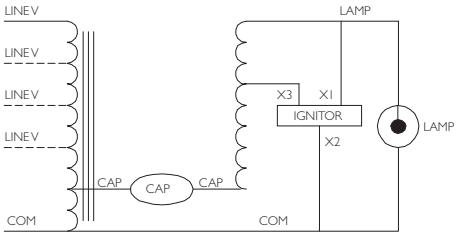

© 2015 Koninklijke Philips N.V. (Royal Philips)
All rights reserved.

Specifications are subject to change without notice. Trademarks are the property of Koninklijke Philips N.V. (Royal Philips) or their respective owners.

www.philips.com/lighting

2015, August 29
data subject to change