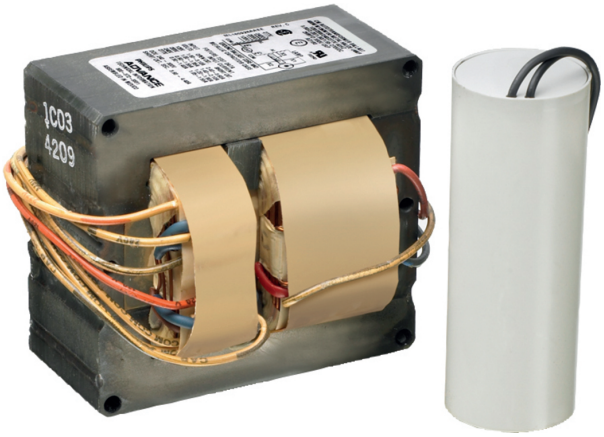

Core & Coil (71A) MH 175W - 450W

CORE & COIL HID MH BAL 400W M135/155 QUAD KIT

The basic ballast is the open core and coil which is most often used as a component within a lighting luminaire. The core and coil also forms the nucleus of Philips Advance's five other ballast configurations.

Product data

General Information

Ansi Code	M135/M155
Lamp Type	400W MH
Number of Lamps	1 piece/unit
Circuit Type	SUPER-CWA
Ballast Type	Magnetic HID
Base Model	71A6092AEE
Core Size	4 1/4 x 4 3/4 (2 coil)
Suitable For Outdoor Use	Yes
Ignitor Catalog Number	LI533-H4
Ignitor Temperature Rating	105°C
Capacitor Value	26 MFD
Capacitor Catalog Number	7C260P33R
Capacitor Require-ments	330V
Capacitor Tempera-ture Rating	105°C
Capacitor Diameter/ Oval Dimensions	1.75 in
Capacitor Height	4.8 in
Automatic Restart	No

Operating and Electrical

Input Voltage	120/208/240/277 V
Input Frequency	60 Hz
Inp. Current (Open Circuit)	2.6/1.56/1.31/1.17 A
Input Current (Starting)	2.97/1.68/1.48/1.3 A
Input Current (Short Circuit)	2.4-3.6/1.4-2.1/1.2-1.8/1.05-1.55 A
Secondary Short Circuit Current	3.6-4.5 A
Constant Wattage Deviation	10%
Ballast Factor (Nom)	1
Power Factor (Nom)	0.90
Nominal Open Circuit Voltage	275 V
Input Current (Oper-ating) (Nom)	3.8/2.2/1.9/1.65 A A
Input Power (Nom)	452 W
Rated Lamp Watts	400W W

Wiring

Wire Striplength	0.5 mm
Wire Length By Color	12"
Wire Type	Stranded
Remote Wiring Configuration Allowed	Yes
Max Ballast-Lamp Distance Remote Wiring	2'
Recommended Fuse Value	10/7/5/5 A

Approval and Application

Open Circuit Voltage Test (Volts)	248-302 V
Approbation Marks	ULR CSA certificate EISA RoHS Compliant

PHILIPS

Core & Coil (71A) MH 175W - 450W

Temperature Marking	D/D/D/D
UL Recognized	Yes
Hipot Test (1 Minute)	2000 V
Hipot Test (2 Seconds)	2500 V
UL Insulation Class	H(180°C)
UL Temperature Code	1029D

- Product Data

Order product name	CORE & COIL HID 71A6092001D
EAN/UPC - Product	781087098035
Order code	71A6092001D
Numerator - Quantity Per Pack	1
Numerator - Packs per outer box	1
Material Nr. (12NC)	913700535809
Net Weight (Piece)	5.657 kg

Dimensional drawing

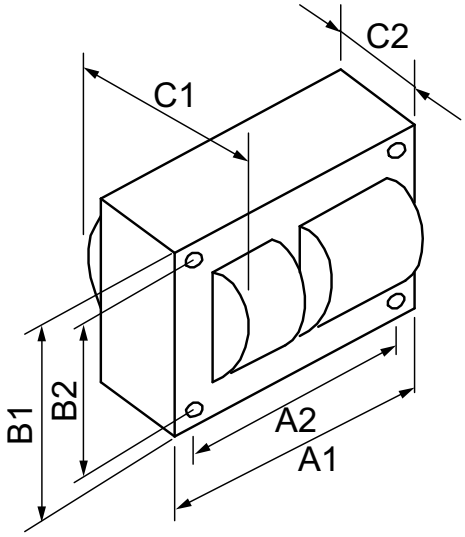

MH BAL 400W M135/155 QUAD KIT

Product	C1	C2	A1	A2	B1	B2
CORE & COIL HID 71A6092001D	4.1 in	2.16 in	4.8 in	4.4 in	4.3 in	3.9 in

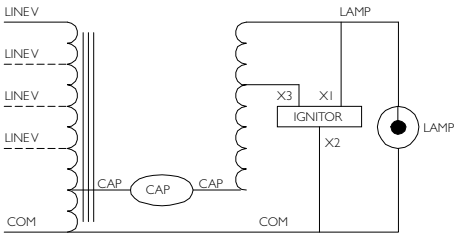

© 2015 Koninklijke Philips N.V. (Royal Philips)
All rights reserved.

Specifications are subject to change without notice. Trademarks are the property of Koninklijke Philips N.V. (Royal Philips) or their respective owners.

www.philips.com/lighting

2015, November 29
data subject to change