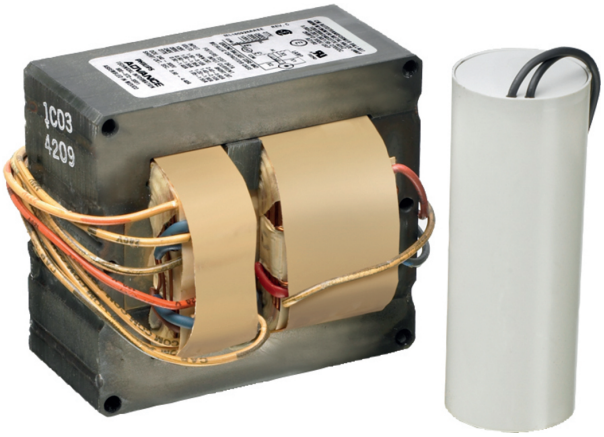

Core & Coil (71A) MH <lt/> 175W

CORE & COIL HID MH BAL 70W M98/143 QUAD KIT

The basic ballast is the open core and coil which is most often used as a component within a lighting luminaire. The core and coil also forms the nucleus of Philips Advance's five other ballast configurations.

Product data

- General Information

Ansi Code	M98/M143
Lamp Type	70W MH
Number of Lamps	1 piece/unit
Circuit Type	HX-HPF
Ballast Type	Magnetic HID
Base Model	71A5292
Core Size	3 X 4 (2 LW)
Suitable For Outdoor Use	Yes
Ignitor Catalog Number	LI533-H4
Ignitor Temperature Rating	105°C
Capacitor Value	8 MFD
Capacitor Catalog Number	7C080L30RA
Capacitor Require-ments	280V
Capacitor Tempera-ture Rating	105°C
Capacitor Diameter/ Oval Dimensions	1.25 in
Capacitor Height	2.75 in
Automatic Restart	No

- Operating and Electrical

Input Voltage	120/208/240/277 V
Input Frequency	60 Hz
Inp. Current (Open Circuit)	1.66/0.97/0.83/0.73 A
Input Current (Starting)	0.71/0.41/0.4/0.3 A
Input Current (Short Circuit)	0.65-0.98/0.4-0.6/0.32-0.49/0.29-0.44 A
Secondary Short Circuit Current	1.03-1.26 A
Constant Wattage Deviation	7%
Ballast Factor (Nom)	1
Power Factor (Nom)	0.90
Nominal Open Circuit Voltage	255 V
Input Current (Oper-ating) (Nom)	0.85/0.49/0.42/0.37 A A
Input Power (Nom)	92 W
Rated Lamp Watts	70W W

- Wiring

Wire Striplength	0.5 mm
Wire Length By Color	12"
Wire Type	Stranded
Remote Wiring Configuration Allowed	Yes
Max Ballast-Lamp Distance Remote Wiring	15'
Recommended Fuse Value	4/3/2/2 A

- Approval and Application

Open Circuit Voltage Test (Volts)	230-280 V
Approbation Marks	ULR CSA certificate RoHS Compliant
Temperature Marking	A/A/A/A

PHILIPS

Core & Coil (71A) MH <lt/> 175W

UL Recognized	Yes
Hipot Test (1 Minute)	2000 V
Hipot Test (2 Seconds)	2500 V
UL Insulation Class	H(180°C)
UL Temperature Code	1029A

EAN/UPC - Product	781087050729
Order code	71A5292001D
Numerator - Quantity Per Pack	1
Numerator - Packs per outer box	1
Material Nr. (12NC)	913700571809
Net Weight (Piece)	2.352 kg

- Product Data

Order product name	CORE & COIL HID 71A5292001D

Dimensional drawing

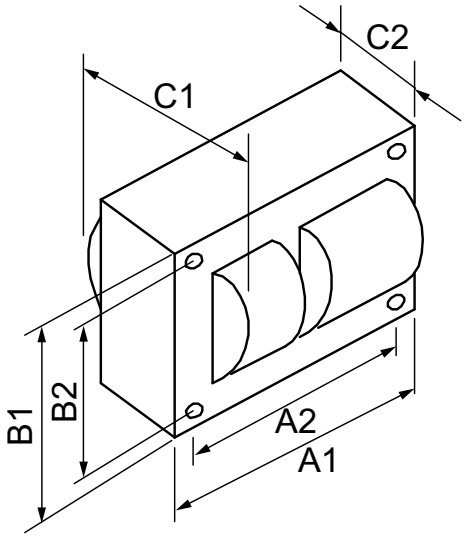

MH BAL 70W M98/143 QUAD KIT

Product	C1	C2	A1	A2	B1	B2
CORE & COIL HID 71A5292001D	2.88 in	1.44 in	3.9 in	3.5 in	2.8 in	2.4 in

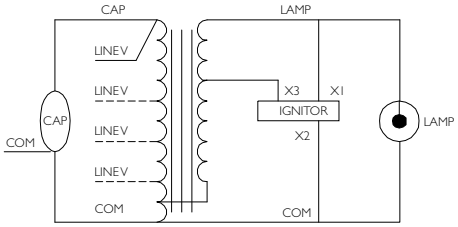

© 2015 Koninklijke Philips N.V. (Royal Philips)
All rights reserved.

Specifications are subject to change without notice. Trademarks are the property of Koninklijke Philips N.V. (Royal Philips) or their respective owners.

www.philips.com/lighting

2015, December 23
data subject to change