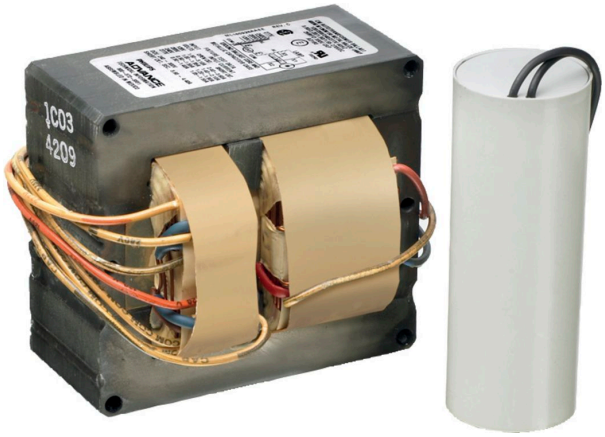

Core & Coil (71A) MH 175W - 450W

CORE & COIL HID MH BAL 400W M59 5-TAP KIT

The basic ballast is the open core and coil which is most often used as a component within a lighting luminaire. The core and coil also forms the nucleus of Philips Advance's five other ballast configurations.

Product data

• General Characteristics

Lamp Type	400W MH
Number of Lamps	1 piece
Line Voltage	120/208/240/277/480 V
Input Current (Operating)	4.13/2.29/2.2/1.72/0.99 A
Line Frequency	60 Hz
Circuit Type	CWA
Ballast Type	Magnetic HID
Base Model	71A6051
Core Size	4 1/4 x 4 3/4 (2 coil)
Suitable for Outdoor use?	Yes
Ignitor Catalog Number	NA
Ignitor Temp Rating	NA
Capacitor value [µF]	24 MFD
Capacitor Catalog Number	7C240P40R
Capacitor Requirements	400V
Capacitor Temp Rating	105°C
Capacitor Dia/Oval Dim	1.75 in
Capacitor Height	4.8 in
Family Name	Core & Coil MH

• Operating Characteristics

Automatic restart	No
Input Voltage at Lamp Dropout	60/115/130/145/260 V
Nominal Open Circuit Voltage	300 V
Inp. Current (Open Circuit)	2.86/1.45/1.29/1.1/0.62 A
Input Current (Starting)	3.51/2.0/1.72/1.49/0.86 A
Input Current Short Circuit	2.7-4.05/1.56-2.34/1.29-1.92/1.17-1.76 /0.68-1.02 A
Secondary ShortCircuit Current	3.04-4.56 A
Input Power Gear	455 W
Constant wattage deviation	10%
Ballast factor	1 -
Power Factor	0.90

• Wiring Characteristics

Wire Striplength	0.5 mm
Wire Length by Color	12"
Wire Type	Stranded
Allowed Wiring Config(Remote)	Yes
Max Dist. Ball to Lamp(Remote)	Determined by AWG used
Recommended Fuse	10/7/5/5/3 A

• System Chars on driver level

Rated Lamp Watts	400W

• Product Dimensions

Length A1	4.8 in
Length A2	4.4 in
Width B1	4.3 in
Coil Depth C1	4.45 in
Stack Height C2	2.34 in
Width B2	3.9 in

PHILIPS

Core & Coil (71A) MH 175W - 450W

- Approval & Application Chars

Approbation Marks	ULR, CSA, RoHS
CE marking	No
VDE certificate	No
UL Listed	No
CSA certificate	Yes
CCC certificate	No
Chia Quality Certificate	No
Temperature marking	C/C/D/C/D
CEC Listing	No
cUL certificate	No
EISA	No
ETL Certificate	No
FIDE Certificate	No
NOM certificate	No
RoHS Compliant	Yes
SASO Certificate	No
UL Recognized	Yes
ANSI Code	M59
HiPot Test (1 minute)	2000 V
HiPot Test (2 seconds)	2500 V
Open Circ Voltage Test (Volts)	280-320 V
UL Insulation Class	H(180°C)
UL Temperature Code	1029D

- Product Data

Product number	71A6051001D
Full product name	MH BAL 400W M59 5-TAP KIT
Short product name	MH BAL 400W M59 5-TAP KIT
Pieces per Sku	1
Skus/Case	1
Bar code on pack	781087110379
Bar code on case	30781087110370
Logistics code(s)	913710414201
eop_net_weight_pp	5.938 kg

Dimensional drawing

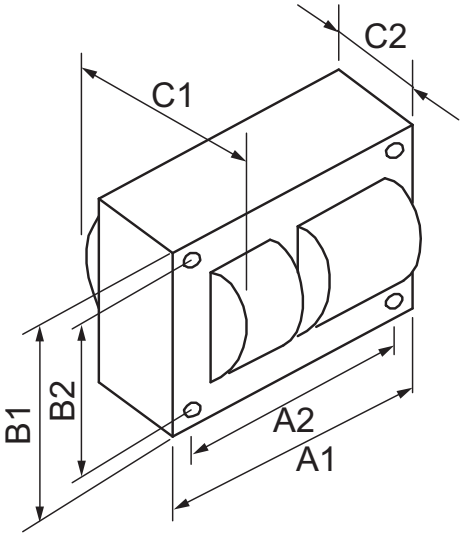

CORE & COIL HID MH BAL 400W M59 5-TAP KIT

Product	A1 (Norm)	A2 (Norm)	B1 (Norm)	B2 (Norm)	C1 (Norm)	C2 (Norm)
MH BAL 400W M59 5-TAP KIT	4.8	4.4	4.3	3.9	4.45	2.34

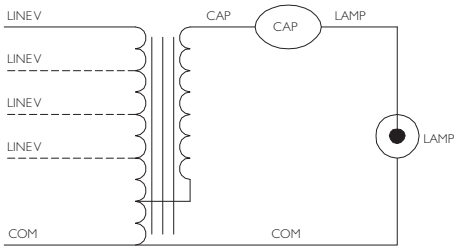

© 2015 Koninklijke Philips N.V. (Royal Philips)
All rights reserved.

Specifications are subject to change without notice. Trademarks are the property of Koninklijke Philips N.V. (Royal Philips) or their respective owners.