Centium T8 Instant Start

CENTIUM ELE BALLAST (2) F32T8 120-277V

Reliable and energy efficient Philips Advance's Centium commercial grade specifications, plus added benefits of lamp striation reduction technology.

Product data

General Characteristics

Lamp Type	F32T8
Number of Lamps	1/2 piece
Input Voltage	120-277 V
Line Frequency	50/60 Hz
Ballast Type	Electronic Fluorescent
Base Model	ICN2P32N
Housing	N
Housing Dimensions	9.5" x 1.3" x 1.0"
Housing Material	Metal
Suitable for Outdoor use?	Yes
Starting Method	Instant Start
Family Name	Centium

Operating Characteristics

Automatic restart	Yes
Ignition time	0.1 s
Input Power Gear	56-56 W
Ballast factor	0.89 -
Ballast Efficacy Factor	1.59 -
Power Factor	0.98
Lamp Current Crest Factor	1.7 -
Sound Rating	A
Max THD	10 %

Wiring Characteristics

Color input terminals	No terminals
Color output terminals	No terminals
Connector type	No connector
Wire Striplength	0.50/0.375 mm
Lamp Connection	Parallel
Wire Gauge	18AWG
Wire Length by Color	See data sheet
Wire Type	Solid
Allowed Wiring Config(Remote)	Yes
Allowed Wiring Config(Tandem)	Yes
Allowed Wiring Config(Through)	Yes
Max Dist. Ball to Lamp(Remote)	ES = 6' / Standard = 20'
Max Dist. Ball to Lamp(Tandem)	ES = 6' / Standard = 20'
Max Dist.Ball to Lamp(Through)	ES = 6' / Standard = 20'

System Chars on driver level

Rated Lamp Watts	32W

Temperature Characteristics

T-case maximum	70 C

Product Dimensions

Length A1	9.50 in
Length A2	8.90 in
Width B1	1.30 in
Height C1	1.00 in

Approval & Application Chars

EMC Immunity	FCC Non-Consumer
Approbation Marks	UL, CSA, NEMA Premium, RoHS
UL Listed	Yes
CSA certificate	Yes

PHILIPS

Centium T8 Instant Start

CEC Listing	Yes
CEE Rated	Yes
Circle E logo	No
CSA E	Yes
cUL certificate	No
DOE	No
Energy Star	No
FIDE Certificate	No
NEMA Premium	Yes
NOM certificate	Yes
RoHS Compliant	Yes
SASO Certificate	No
UL Recognized	No

- Product Data

Product number	ICN2P32N35M
Full product name	ELE BALLAST (2) F32T8 120-277V
Short product name	ELE BALLAST (2) F32T8 120-277V
Pieces per Sku	1
Skus/Case	30
Bar code on pack	781087069127
Bar code on case	50781087069139
Logistics code(s)	913710842702
eop_net_weight_pp	0.305 kg

Dimensional drawing

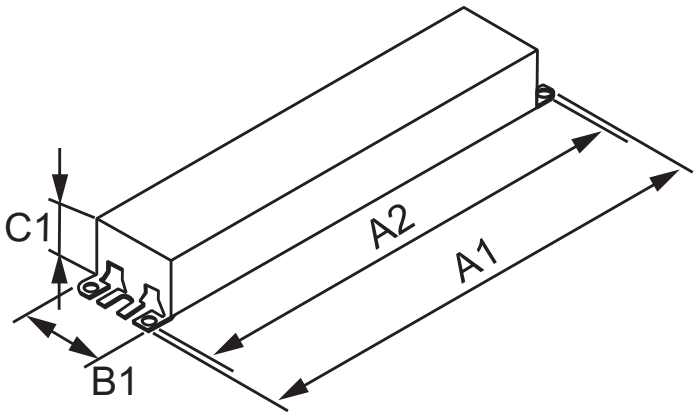

CENTIUM ELE BALLAST (2) F32T8 120-277V

Product	A1 (Norm)	A2 (Norm)	A3 (Norm)	B1 (Norm)	C1 (Norm)
ELE BALLAST (2) F32T8 120-277V	9.50	8.90	-	1.30	1.00

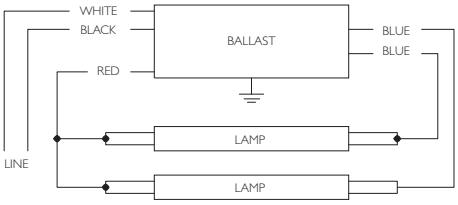

For single lamp operation, insulate unused blue lead for 600 V

© 2015 Koninklijke Philips N.V. (Royal Philips)
All rights reserved.

Specifications are subject to change without notice. Trademarks are the property of Koninklijke Philips N.V. (Royal Philips) or their respective owners.

www.philips.com/lighting

2015, August 29
data subject to change